WP2FCF26/PC

JOB NAME: _____

DATE: _____

TYPE: _____

DESCRIPTION

Fully shielded, Full Cutoff wallpack. Full Cutoff optics with flat tempered glass lens. EZ mount knockouts for easy wiring. Lamp supplied.

SPECIFICATIONS

Cutoff Lens:
Tempered glass.

Finish:
Chip and fade resistant polyester powder coating.

Housing:
Die cast aluminum, 1/2" NPS tapped holes top, both sides and back for conduit or photocontrol. Hinged refractor frame. Continuous silicone rubber gasket.

Reflector:
Specular anodized aluminum, removable for installation. Symmetrical light pattern maximizes distance between fixtures.

Photocell:
Button Photocell installed and wired for 120V

Refractor:
Prismatic optics designed to minimize glare and throw light down and out. Heat resistant borosilicate glass.

UL Listing:
Suitable for wet locations. HID fixtures can be wired with 90° C supply wiring if supply wires are routed 3" away from ballast.

Patents:
RAB sensor and fixture designs are protected under U.S. and International Intellectual Property laws

Color:
Bronze

Weight:
17.2

DIMENSIONS

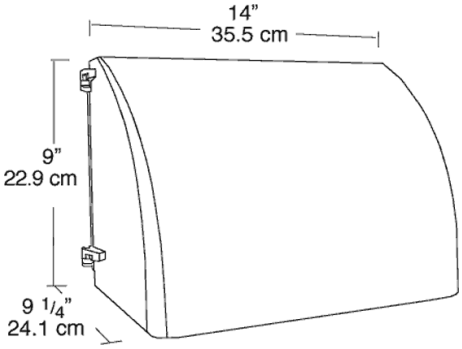

ORDERING INFORMATION

Compact Fluorescent
Lamp supplied with fixture

Total Watts	Lamp Type	Lamp Base	Ballast	Starting Amps/ Operating Amps 120V	208V	240V	277V	Input Watts	LAMP ANSI	Initial Lumens	Lamp Hours
26	26W Triple	GX24q-3	Elec HPF QT	0.24	0.2	0.18	0.11	29		1800	12000

Factory Installed Options
Add suffix to Catalog Number

Tamperproof screws (/TP)
Swivel Photocontrol (/PCS)
Single fusing for 120 and 277 volt (/F)
Double fusing for 208 and 240 volt (/FF)
Button Photocontrol for 208 - 277 volt (/PC2)
Button Photocontrol (/PC)

Note: Specifications may change without notice

RAB Lighting, Inc. • 170 Ludlow Ave• Northvale, NJ 07647 • Tel: 888 RAB-1000 • Fax: 888 RAB-1232 • www.rabweb.com
© 2010 RAB Lighting, Inc.