VXLED INSTALLATION INSTRUCTIONS

Thank you for buying RAB lighting fixtures. Our goal is to design the best quality products to get the job done right. We'd like to hear your comments. Call the Marketing Department at 888-RAB-1000, or email: marketing@rabweb.com

IMPORTANT

READ CAREFULLY BEFORE INSTALLING FIXTURE. RETAIN THESE INSTRUCTIONS FOR FUTURE REFERENCE.
RAB fixtures must be wired in accordance with the National Electrical Code and all applicable local codes. Proper grounding is required for safety. THIS PRODUCT MUST BE INSTALLED IN ACCORDANCE WITH THE APPLICABLE INSTALLATION CODE BY A PERSON FAMILIAR WITH THE CONSTRUCTION AND OPERATION OF THE PRODUCT AND THE HAZARDS INVOLVED.
WARNING: Make certain power is OFF before installing or maintaining fixture. No user serviceable parts inside.

CEILING MOUNT

Fixture must be ceiling mounted. Use a recessed or surface mount junction box (not supplied) or use the **Housing** to make electrical connections. Inner globe is provided for clear and colored globes. **Fixture can not be mounted upside down in wet locations!**
DO NOT USE FIXTURE WITHOUT OUTER GLOBE.

1. Loosen **Housing Screws** and open **Housing**.
2. Prepare back of **Housing** to use by knocking out necessary mounting holes. Seal all gaps between ceiling and fixture with weatherproof silicone sealant.
3. Fixture may be wired through back conduit entrance or side conduit entrance for surface mounting. Connect wires as described in wiring section.
4. Close **Housing.** Tighten screws and check **Housing Gasket** seal. Seal all unused plugs with weatherproof silicone sealant.
5. Screw in required glass globe or permaglobe. Tighten **Outer Globe** until it makes full contact with **Globe Gasket. OUTER GLOBE REQUIRED!**
6. Screw on optional wire or diecast **Guard**.

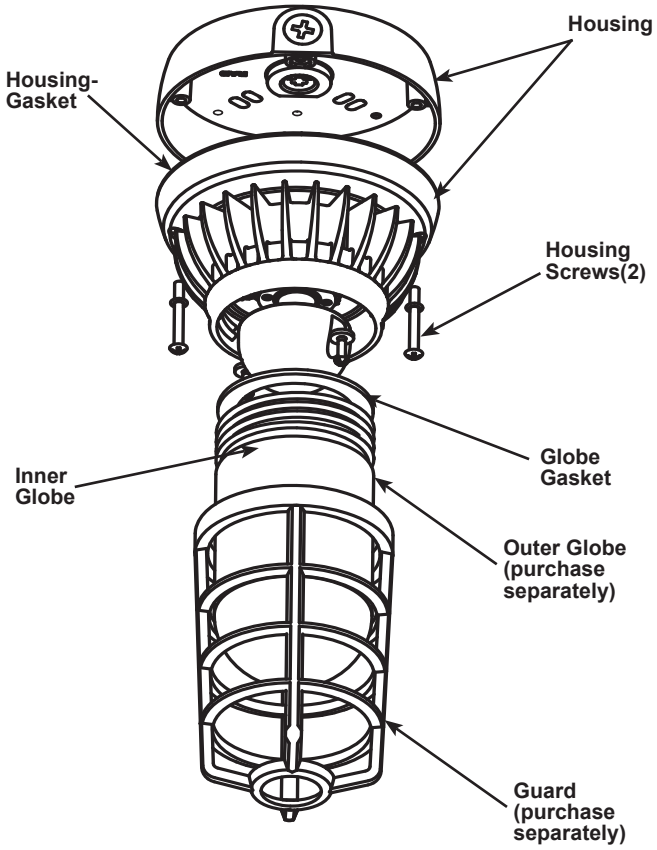

WIRING

Universal voltage driver permits operation at 120V thru 277V, 50 or 60 Hz.

1. Connect the black fixture lead to the (+) LINE supply lead.
2. Connect the white fixture lead to the (-) COMMON supply lead.
3. Connect the GROUND wire from fixture to supply ground.

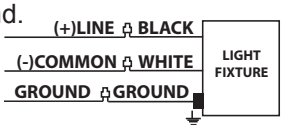

US: pat. D653,795; D651738; **CN:** ZL201130028359.7; ZL201130028360.X; **TW:** pat. 101301369; **MX:** 35699; **Pat. pending; CA:**(D) RAB Lighting Inc;

Note: These instructions do not cover all details or variations in equipment nor do they provide for every possible situation during installation, operation or maintenance.

© 2011 RAB LIGHTING Inc.
Northvale, New Jersey 07647 USA
VXLED no globe IN 0712

Easy Installation & Product Help

Tech Help Line
Call our experts
888 RAB-1000

Toll Free Fax
Send a fax to RAB
888 RAB-1232

rabweb.com
Visit our website
for product info

e-mail
Answered promptly
sales@rabweb.com

VXBRLED INSTALLATION INSTRUCTIONS

Thank you for buying RAB lighting fixtures. Our goal is to design the best quality products to get the job done right. We'd like to hear your comments. Call the Marketing Department at 888-RAB-1000, or email: marketing@rabweb.com

IMPORTANT

READ CAREFULLY BEFORE INSTALLING FIXTURE. RETAIN THESE INSTRUCTIONS FOR FUTURE REFERENCE.
RAB fixtures must be wired in accordance with the National Electrical Code and all applicable local codes. Proper grounding is required for safety. THIS PRODUCT MUST BE INSTALLED IN ACCORDANCE WITH THE APPLICABLE INSTALLATION CODE BY A PERSON FAMILIAR WITH THE CONSTRUCTION AND OPERATION OF THE PRODUCT AND THE HAZARDS INVOLVED.
WARNING: Make certain power is OFF before installing or maintaining fixture. No user serviceable parts inside.

WALL MOUNT

Fixture must be wall mounted. Use recessed or surface mount junction box (not supplied) or use the **Housing** as the junction box. Inner globe is provided for clear and colored globes. **Fixture can not be mounted upside down in wet locations!**
DO NOT USE FIXTURE WITHOUT OUTER GLOBE.

1. Loosen **Housing Screws** and open **Housing**.
2. Prepare back of **Housing** to use by knocking out necessary mounting holes. Seal all gaps between wall and fixture with weatherproof silicone sealant.
3. Fixture may be wired through back conduit entrance or side conduit entrance for surface mounting. Connect wires as described in wiring section.
4. Close **Housing.** Tighten screws and check **Housing Gasket** seal. Seal all unused plugs with weatherproof silicone sealant.
5. Screw in required glass globe or permaglobe. Tighten **Outer Globe** until it makes full contact with **Globe Gasket. OUTER GLOBE REQUIRED!**
6. Screw on optional wire or diecast **Guard**.

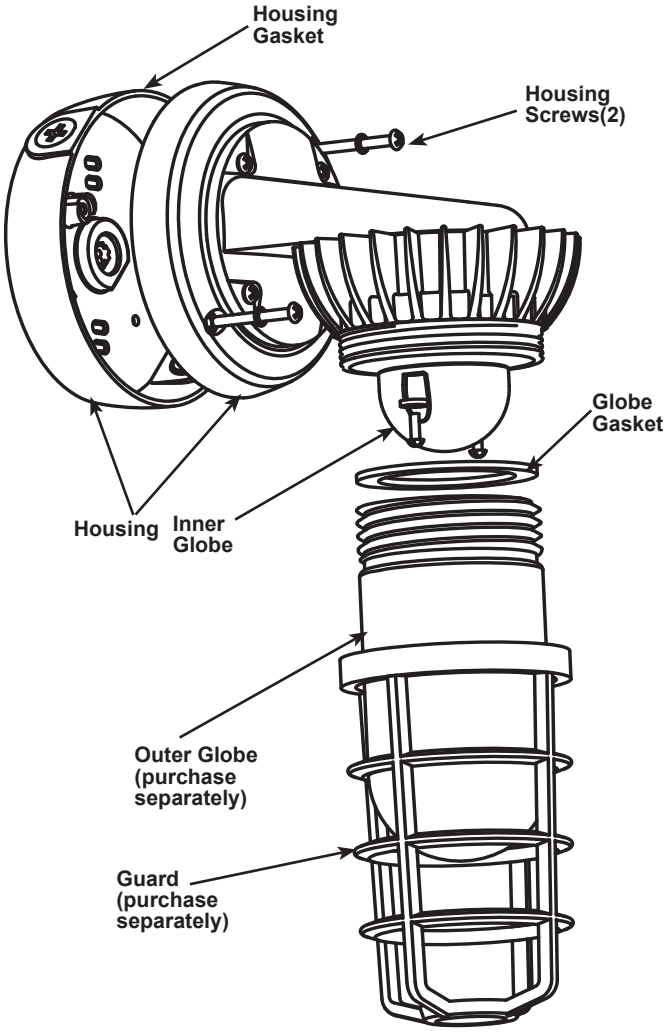

WIRING

Universal voltage driver permits operation at 120V thru 277V, 50 or 60 Hz.

1. Connect the black fixture lead to the (+) LINE supply lead.
2. Connect the white fixture lead to the (-) COMMON supply lead.
3. Connect the GROUND wire from fixture to supply ground.

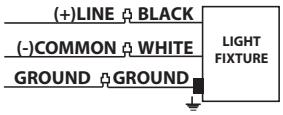

US: pat. pending; D651738; **CN:** ZL201230040341.3; ZL201130028360.X; **TW:** pat. 101301368; **MX:** 35699; **Pat. pending; CA:** (D) RAB Lighting Inc;

Note: These instructions do not cover all details or variations in equipment nor do they provide for every possible situation during installation, operation or maintenance.

Easy Installation & Product Help

Tech Help Line
Call our experts
888 RAB-1000

Toll Free Fax
Send a fax to RAB
888 RAB-1232

rabweb.com
Visit our website
for product info

e-mail
Answered promptly
sales@rabweb.com

© 2011 RAB LIGHTING Inc.

Northvale, New Jersey 07647 USA

VXBRLED no globe-IN-0712