FZH250PSQ/PC

JOB NAME: _____

DATE: _____

TYPE: _____

DESCRIPTION

Compact, tough and good looking cast aluminum housing with steel trunnion mount for easy surface mounting and aiming flexibility. Stainless steel screws. Lamp supplied.

SPECIFICATIONS

Finish:
Chip and fade resistant polyester powder coating

Housing:
Precision die cast aluminum

Lens Gasket:
Molded one-piece silicone in die cast retaining groove to remain in place during relamping

Lens:
Tempered shock resistant glass

Reflector:
High quality anodized aluminum

Socket:
Glazed porcelain 4kv pulse rated with nickel plated screw shell and spring contacts

EPA:
1.3

UL Listing:
Suitable for wet locations. Suitable for mounting within 4' of the ground.

Patents:
Pat. D547,477

Photocontrol:
Button Photocontrol installed and wired for 120V

Pulse Start:
Pulse Start metal halide for increased lamp life, lumen maintenance, color uniformity and efficiency

Color:
Bronze

Weight:
28.4

DIMENSIONS

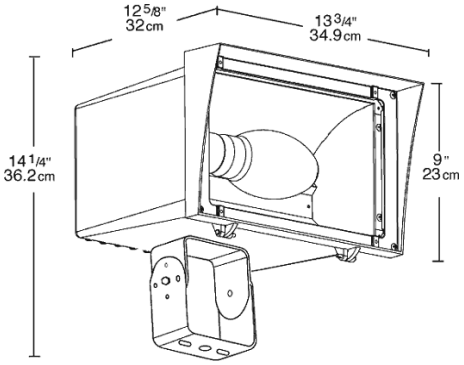

PHOTOMETRIC

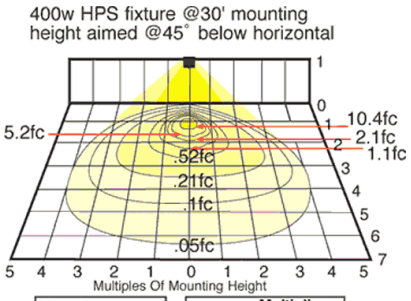

Mounting Height	Multiplier
40'	.6
30'	1.0
25'	1.4
20'	2.3
15'	4.0

Watts	Multiplier HPS	Multiplier MH
175		.3
200PS		.4
250	.6	.4
250PS		.5
320PS		.6
350PS		.7
400	1.0	.7
400PS		.8

ORDERING INFORMATION

Metal Halide
Lamp supplied with fixture

Total Watts	Lamp Type	Lamp Base	Ballast	Starting Amps/ Operating Amps 120V	208V	240V	277V	Input Watts	LAMP ANSI	Initial Lumens	Lamp Hours
250	ED28	Mogul	CWA-HPF QT	1.4/2.5	.8/1.5	.7/1.3	.6/1.1	288	M138	25000	15000

Factory Installed Options
Add suffix to Catalog Number

Swivel Photocontrol wired for 120V (/PCS)
Button Photocontrol wired for 120V (/PC)
Button Photocontrol wired for 480 (/PC4)
480 volt only ballast (/480)
Button Photocontrol wired for 208 - 277V (/PC2)

Note: Specifications may change without notice

RAB Lighting, Inc. • 170 Ludlow Ave• Northvale, NJ 07647 • Tel: 888 RAB-1000 • Fax: 888 RAB-1232 • www.rabweb.com
© 2009