TUNABLE WHITE & COLOR TUNING
1100 LUMEN 6" LED SILENT CEILING DOWNLIGHT
MEDIUM/WIDE BEAM

HYPERBOLIC OPEN APERTURE

ChromaControl™ CT6 SERIES

ENVIRONMENTALLY FRIENDLY, ENERGY EFFICIENT

- Tunable natural white light on the Planckian curve
- Very high CRI and R9 values throughout range from 1600K thru 4000K
- Adjustable Hue and Saturation for full color tuning to anywhere on the chromaticity diagram
- 'COPY' and 'PASTE' feature for exact fixture to fixture color matching within 2 SDCM
- No harmful ultraviolet or infrared wavelengths
- No lead or mercury

Type _____ Cat. No. _____

Project: _____

Notes: _____

PRODUCT SPECIFICATIONS

Optics

Reflector: Unique hyperbolic shape optimized for small, directional LED source, maximizes fixture efficiency while creating the "Silent Ceiling" appearance by reducing lamp image and aperture brightness • Geometry of hyperbolic curve provides unique aperture appearance and smoother light distribution • Medium and wide distributions available

Finishes: Low iridescent specular, semi-specular and satin Alzak® finishes available with integral flange of same finish • See reflector options for other colors and finishes

Electrical

LED Light Engine: Natural white light on the Planckian curve • Tunable CCT range of 1600-4000K • Very high (91-98 CRI) color rending and R9 values over the tunable range • Integrated thermal turn down protection • Calibration feature maitains color point over lifetime • Dimming down to 1% • 0-10V dimming

LED Driver: 24V DC, 1.25 Amp Output (transformer required for 277V & 347V)

Life: Rated for 50,000 hours at 70% lumen maintenance

Wireless Control

Light commissioning Tool: Optical feedback and signal processing • Provides point and click color tuning, dimming and the ability to measure and replicate light source settings across an entire installation • Stores values allowing for calibration to original settings

Wall Control

CCT can be adjusted along Planckian Curve from 1600 - 4000K with a controls system or wall dimmer using 0-10V protocol.

Mechanical

Housing: Low profile, universal housing design installs in suspended grid, plaster or drywall • Integral cast aluminum heat sink conducts heat away from LED light engine • Driver is accessible from above and below ceiling and can be upgraded to accommodate future technology improvements.

Mounting Frame: Heavy gauge steel lower housing ring accommodates ceilings up to 2" thick • For thicker ceilings; consult factory

Mounting Bracket: Mounting brackets have 3" vertical adjustment and accepts most commercial bar hangers, including our proprietary Tru-Lock bar hangers • Our one-piece Tru-Lock bar hangers have integral T-bar locking screws and alignment notches for locating and locking fixture in the center or 1/4" tile increments

Junction Box: Over size 4" x 6" galvanized steel junction box with (6) ½" (2) ¾" knockouts facilitate quick wiring

Labels and Listings

- UL listed for damp locations • I.B.E.W. Union made
- UL and cUL, RoHS compliant • EMI complies with FCC 47, Part 15, Class A
- ARRA compliant

Warranty: 5 years when used in accordance with manufacturing guidelines.
Product specifications subject to change without notice.

DIMENSIONS

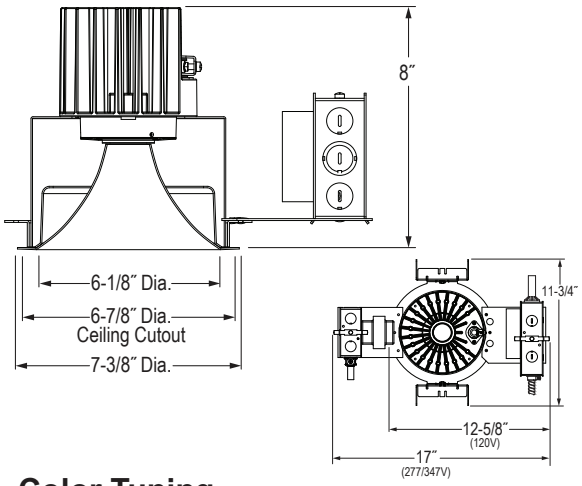

Color Tuning

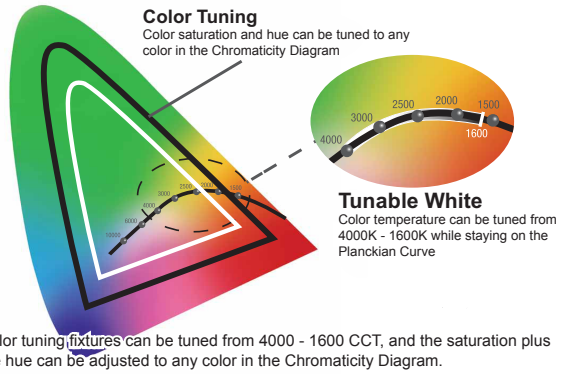

Color tuning fixtures can be tuned from 4000 - 1600 CCT, and the saturation plus the hue can be adjusted to any color in the Chromaticity Diagram.

ORDERING INFORMATION: Rough-in, reflector and accessories each ordered separately.

Example: **CT6-11V1**

Rough-in	Light Engine Lumens	Color Temperature	Voltage	Options
CT6 -	11	V	-	
CT6	**11** 1100 Lumens	**V** Variable 1600K-4000K	**1** 120V **2** 277V **3** 347V	**F** Fuse and Fuse Holder **†CP** Chicago Plenum **LDI** Lumen Depreciation Indicator

Example: **L600HW-CQ-WH**

Reflector	Color Options	Finish	Options
-	-		-
L600H Open Reflector, Medium Distribution **L600HW** Open Reflector, Wide Distribution	**C** Clear **G** Gold **WT** Wheat **PT** Pewter **BZ** Bronze **B** Black **W** White	**Low Iridescent Alzak® Finishes:** **L** Specular **S** Satin **Q*** Semi-Specular (*Clear only) Blank for white	**WH** White Flange

Example: **HB-TL**

Accessories	
CTTOOL	Remote Commissioning Tool
HB-TL	25" Tru-Lock grid ceiling bar hangers, Pair
HB-52	52" C-Channel Bar Hangers, Pair
HB-28	28" C-Channel Bar Hangers, Pair
LB-27	27" Linear Bar Hangers, Pair
SCA6-*	Sloped Ceiling adapter

*Angle must be specified when ordering;
Available in 5°, 10°, 15°, 20°, 25°, 30°
Example: SCA6-20

† Consult Factory for Availability

Juno Lighting Group
an AcuityBrands company
1300 South Wolf Rd • Des Plaines, Illinois 60018
PHONE 800-367-5866 • FAX 888-708-6578
www.junolightinggroup.com

Catalog Number: CT6-11V1 (27K); L600H-CL
PHOTOMETRIC REPORT
Test Number: PR03132083P
Total Lumen Output: 891 Lumens
Luminaire Efficacy: 30.3 lm/w (27K)
Luminaire Spacing Criteria: 0.81
Luminaire: Clear specular Alzak® reflector. Open bottom, medium distribution
CIE-Type: Direct

Initial Footcandles

Distance to Illuminated Plane (Feet)	Footcandles Beam Center	Footcandles Beam Edge	Beam Diameter
6′	32.4	11.6	6.0′
7′	23.8	8.5	7.0′
8′	18.2	6.5	8.0′
9′	14.4	5.1	9.1′
10′	11.7	4.2	10.1′
11′	9.7	3.4	11.1′
12′	8.1	2.9	12.2′
13′	6.9	2.5	13.1′
14′	6.0	2.1	14.1′
15′	5.2	1.9	15.1′

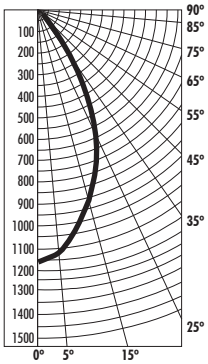

Candlepower Distribution
(Candelas)

Angle	Candela	Lumens
0°	1168	
5°	1121	107
15°	918	260
25°	642	297
35°	290	182
45°	54	42
55°	2	2
65°	0	0
75°	0	0
85°	0	0

Lumen Multiplier:
4000K x 0.75
3500K x 0.82
3000K x 0.89

Luminance Data

Angle in Degrees	Candela/M^2
45°	4005
55°	217
65°	0
75°	0
85°	0

Zonal Lumen Summary

Zone	Lumens%	%Fixture
0-30°	664	74.6
0-40°	847	95.1
0-60°	891	100.0
0-90°	891	100.0
90-180°	0	0.0
0-180°	891	100.0

AVERAGE INITIAL FOOTCANDLES
Reflectances: 80% Ceiling, 50% Walls, 20% Floors

Luminaire Spacing	Room Cavity Ratio RCR1	RCR4	RCR8
5′ x 5′	40	32	26
6′ x 6′	27	23	18
7′ x 7′	20	17	13
8′ x 8′	15	13	10
9′ x 9′	12	10	8
10′ x 10′	10	8	6
11′ x 11′	8	7	5
12′ x 12′	7	6	4

COEFFICIENTS OF UTILIZATION - % (Zonal Cavity Method)
Effective Floor Reflectance 20%

PCC	80				70				50			30			10			0
PW	**70**	**50**	**30**	**10**	**70**	**50**	**30**	**10**	**50**	**30**	**10**	**50**	**30**	**10**	**50**	**30**	**10**	**0**
0	119	119	119	119	116	116	116	116	111	111	111	106	106	106	102	102	102	100
1	114	111	109	106	111	109	107	102	105	103	102	101	100	99	98	97	96	94
2	108	104	100	96	106	102	98	95	99	96	93	96	93	91	93	91	89	88
3	103	97	92	88	101	96	91	88	93	89	86	91	87	85	88	86	84	82
4	98	91	85	81	96	90	85	81	88	83	80	86	82	79	84	81	78	77
5	93	85	80	75	92	84	79	75	82	78	74	81	77	74	79	76	73	72
6	89	80	74	70	87	79	74	70	78	73	69	76	72	69	75	71	69	67
7	85	76	70	66	83	75	69	65	74	69	65	72	68	65	71	67	64	63
8	81	71	65	61	79	71	65	61	70	65	61	69	64	61	68	64	61	59
9	77	67	62	58	76	67	61	58	66	61	57	65	61	57	64	60	57	56
10	73	64	58	54	72	63	58	54	63	58	54	62	57	54	61	57	54	53

Catalog Number: CT6-11V1 (27K); L600HW-CL
PHOTOMETRIC REPORT
Test Number: PR03132084
Total Lumen Output: 876 Lumens
Luminaire Efficacy: 29.8 lm/w (27K)
Luminaire Spacing Criteria: 0.99
Luminaire: Clear Satin Alzak® reflector. Open bottom, wide distribution
CIE-Type: Direct

Initial Footcandles

Distance to Illuminated Plane (Feet)	Footcandles Beam Center	Footcandles Beam Edge	Beam Diameter
6′	21.3	6.1	8.1′
7′	15.6	4.5	9.4′
8′	12.0	3.4	10.8′
9′	9.5	2.7	12.1′
10′	7.7	2.2	13.5′
11′	6.3	1.8	14.8′
12′	5.3	1.5	16.2′
13′	4.5	1.3	17.5′
14′	3.9	1.1	18.8′
15′	3.4	1.0	20.2′

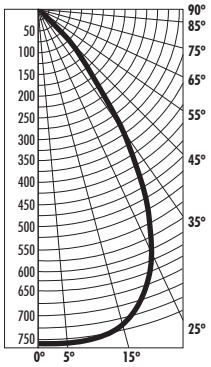

Candlepower Distribution
(Candelas)

Angle	Candela	Lumens
0°	766	
5°	764	73
15°	740	210
25°	614	284
35°	345	217
45°	113	87
55°	0	0
65°	0	0
75°	4	4
85°	0	0

Lumen Multiplier:
4000K x 0.75
3500K x 0.82
3000K x 0.89

Luminance Data

Angle in Degrees	Candela/M^2
45°	8376
55°	0
65°	0
75°	758
85°	0

Zonal Lumen Summary

Zone	Lumens%	%Fixture
0-30°	567	64.8
0-40°	784	89.6
0-60°	871	99.5
0-90°	875	100.0
90-180°	0	0.0
0-180°	875	100.0

AVERAGE INITIAL FOOTCANDLES
Reflectances: 80% Ceiling, 50% Walls, 30% Floors

Luminaire Spacing	Room Cavity Ratio RCR1	RCR4	RCR8
5′ x 5′	39	31	23
6′ x 6′	27	21	16
7′ x 7′	20	16	12
8′ x 8′	15	12	9
9′ x 9′	12	10	7
10′ x 10′	10	8	6
11′ x 11′	8	6	5
12′ x 12′	7	5	4

COEFFICIENTS OF UTILIZATION - % (Zonal Cavity Method)
Effective Floor Reflectance 20%

PCC	80				70				50			30			10			0
PW	**70**	**50**	**30**	**10**	**70**	**50**	**30**	**10**	**50**	**30**	**10**	**50**	**30**	**10**	**50**	**30**	**10**	**0**
0	119	119	119	119	116	116	116	116	111	111	111	106	106	106	102	102	102	100
1	113	110	108	106	111	108	106	104	104	102	101	100	99	98	97	96	95	93
2	107	102	98	95	105	101	97	94	97	94	92	94	92	90	92	90	88	86
3	102	95	90	86	100	94	89	85	91	87	84	89	85	82	86	83	81	80
4	96	88	83	78	94	87	82	78	85	80	77	83	79	76	81	78	75	73
5	91	82	76	72	89	81	76	71	80	75	71	78	74	70	76	73	70	68
6	86	77	71	66	85	76	70	66	74	69	65	73	68	65	72	68	64	63
7	82	72	66	61	80	71	65	61	70	64	61	69	64	60	67	63	60	58
8	77	67	61	57	76	67	61	57	66	60	56	65	60	56	64	59	56	54
9	73	63	57	53	72	63	57	53	62	56	53	61	56	52	60	55	52	51
10	70	59	53	49	69	59	53	49	58	53	49	57	52	49	57	52	49	47

Fixtures tested to IES recommended standard for solid state lighting per LM-79-08. Photometric performance on a single unit represents a baseline of performance for the fixture. Results may vary in the field.

ENGINEERING DATA

Voltage	120V	277V	347V
Light Engine Lumens*	1100	1100	1100
CCT*	2700K	2700K	2700K
Input Current	0.244	0.106	0.084
Input Wattage*	29.0	30.0	30.0
Input Frequency	50/60Hz	50/60Hz	50/60Hz
Power factor	0.97	0.81	0.87

*Lumens and wattage change with variable CCT to maintain 30-35lm/w

Fixtures tested to IES recommended standard for solid state lighting per LM-79-08. Photometric performance on a single unit represents a baseline of performance for the fixture. Results may vary in the field.

JUNO LIGHTING GROUP
an AcuityBrands company
1300 S. Wolf Road • Des Plaines, IL 60018 • Phone (800) 367-5866 • Fax (888) 708-6578
Visit us at www.junolightinggroup.com

Printed in U.S.A. ©2016 Acuity Brands Lighting, Inc.