FOCUS INDUSTRIES®

landscape • entertainment • architectural • hospitality • *illumination*

AL-06 SERIES
AREA LIGHTS

25301 COMMERCENTRE DRIVE • LAKE FOREST, CA 92630 • 949.830.1350 • 888.882.1350 • FAX 949.830.3390

AREA LIGHTS
AL-06 SERIES

LED READY

TYPE

SPECIFICATIONS

CONSTRUCTION: Cast aluminum or cast brass Mushroom Hat; matching extruded aluminum or brass stanchion

LAMP SUPPLIED: 18w S8 #1141; 1200 hours average rating (25w max.)

LAMP OPTIONS: We recommend 3w 50,000 hours average rating OMNI-3 LED (-LED3) or OMNI-3 Super Saver (-LED3SS) 10,000 hours average rating 20w Xenon (-X) or 20w Halogen (-H)

SOCKET: Single contact bayonet, brass nickel plated lamp socket screw shell (Ba15s); double contact bayonet base (Ba15d) for 120v, both with 200° C silicone lead wires

WIRING: Black 3 foot 18/2 zip cord from base of fixture (12v only)
For 25 foot 16/2 fixture lead wire add -25F to catalog number.
120v standard wiring

CONNECTION: FA-05 Quick Connector (not supplied) from fixture to main cable (12/2, 10/2 or 8/2 only) 12v only

MOUNTING: FA-03 black 9" ABS stake, tapped 1/2" NPS

FINISH: Aluminum-Black texture polyester powder coat. Optional finishes available.
Brass-Unfinished brass. Optional finishes available.

Omni LED — LEDS by CREE

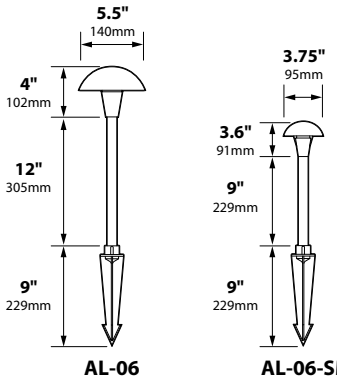

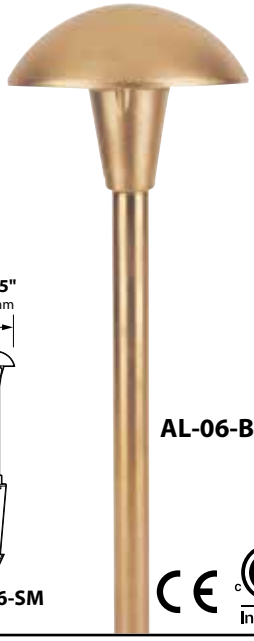

AL-06-BRS

ORDERING INFORMATION

CATALOG NO.	DESCRIPTION	LAMP	SHIP WEIGHT
AL-06-BLT	Cast Aluminum 5.5" Mushroom Hat	18w S8 #1141	2.0 lbs.
AL-06-BRS	Cast Brass 5.5" Mushroom Hat	18w S8 #1141	3.0 lbs.
AL-06-SM-BLT	Cast Aluminum 3.75" Mushroom Hat	18w S8 #1141	2.0 lbs.
AL-06-SM-BRS	Cast Brass 3.75" Mushroom Hat	18w S8 #1141	3.0 lbs.

Intertek

MOUNTING ACCESSORIES

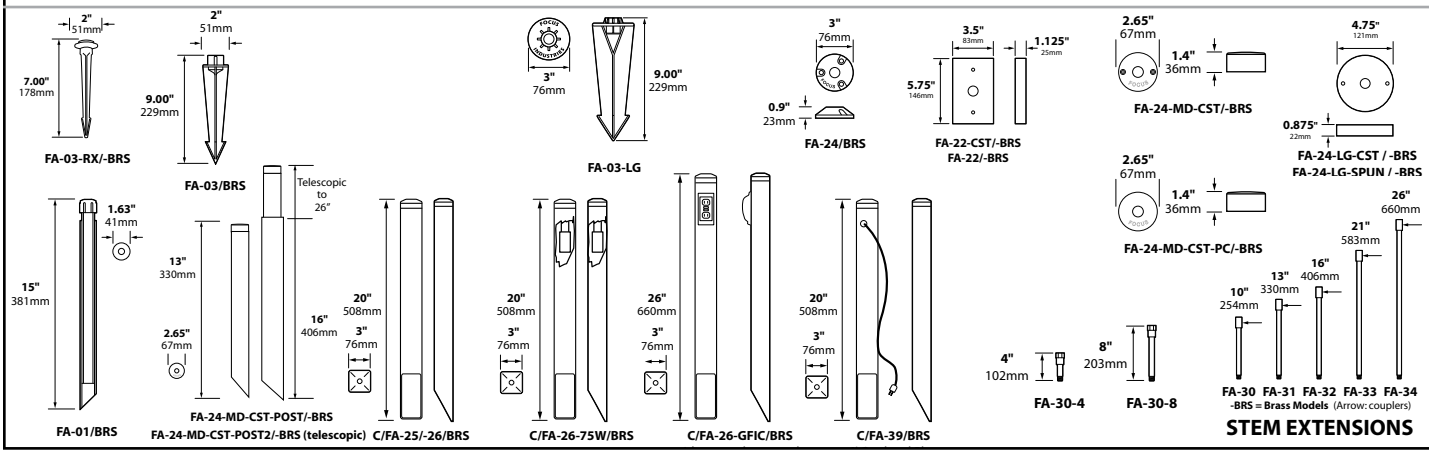

BEAM/GLARE CONTROL ACCESSORIES

FA-97-06 AL-06 Sprinkler Guard / Glare Shield
FA-97-06SM AL-06-SM Sprinkler Guard / Glare Shield

-AH Add to catalog # for Adjustable Hub

LIGHT DISTRIBUTIONS AND PHOTOMETRICS

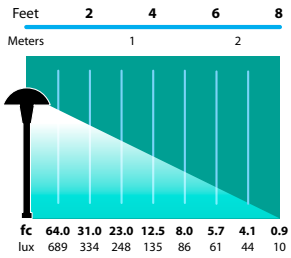

AL-06
Half Spread Photometrics
16 ft. (4.9m) diameter

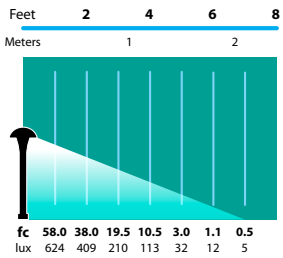

AL-06-SM
Half Spread Photometrics
14 ft. (4.3m) diameter

JOB INFORMATION

Type: Date:

Job Name:

Cat. No.:

Lamp(s):

Specifier:

Contractor:

Notes:

FOCUS INDUSTRIES INC.
25301 COMMERCENTRE DRIVE
LAKE FOREST, CA 92630
www.focusindustries.com
sales@focusindustries.com
(949) 830-1350 • FAX (949) 830-3390

Black Texture (Standard)	Antique Verde	Bronze Texture	Camel	White Texture	Hunter Texture	Rust	Weathered Iron	Weathered Brown	Stucco	Rubbed Verde	Chrome Powder		Acid Rust	Acid Verde	Black Acid Treatment
-BLT	*-ATV*	*-BRT*	*-CAM*	*-WTX*	*-HTX*	*-RST*	*-WIR*	*-WBR*	*-STU*	*-RBV*	*-CPR*		*-BAR/CAR*	*-BAV/CAV*	*-BAT*

BRASS & COPPER ONLY