HAZXLED26CF

Ceiling Mount HAZLED is a Class I, Division 2 LED fixture designed with 57 years of experience in hazardous location lighting.

Color: Natural

Weight: 10.1 lbs

Project:	Type:
Prepared By:	Date:

Driver Info		LED Info	
Type:	Constant Current	Watts:	26W
120V:	0.25A	Color Temp:	5100K (Cool)
208V:	0.13A	Color Accuracy:	69 CRI
240V:	0.12A	L70 Lifespan:	100,000
277V:	0.11A	Lumens:	2,881
Input Watts:	28W	Efficacy:	102 LPW
Efficiency:	92%		

Copyright © 2014 RAB Lighting Inc. All Rights Reserved Note: Specifications are subject to change at any time without notice

Technical Specifications

Other

UL 844:

Electric lighting fixtures for use in hazardous (classified) locations

UL 1598:

Electric lighting fixtures for use in non-hazardous locations

UL 8750:

Light Emitting Diode (LED) Light Sources for Use in Lighting Products

Hazardous Location Classifications:

Class I: A hazardous location in which flammable gases or vapors may be present in the air in sufficient quantities to be explosive or ignitable, such as petroleum refineries, aircraft hangars, dry cleaning plants, utility gas plants or storage areas for liquified petroleum or natural gas, and spray finishing areas.

Division 2: Abnormal condition, where igniteable concentrations of flammable gases, vapors or liquids are not like to exist under normal operating conditions, for example:

Closed storage drums containing flammable liquids in an inside storage room would not normall allow the hazardous vapors to escape into the atmosphere. But if one of the containers is leaking, you've got an abnormal condition.

Groups A - D: The gases and vapors of Class 1 locations are broken into four groups by the Code: A,B,C, and D. These materials are grouped according to the ignition temperature of the substance, its explosion pressure, and other flammable characteristics.

Group A - The only substance in group A is acetylene because it is a gas with extremely high explosion pressures.

Group B - This group includes hydrogen and other materials with similar characteristics.

Group C & D - The most usual Class 1 groups. They comprise the greatest percentage of all Class I hazardous locations. Found in Group C is ethylene. Found in Group D are many of the most common flammable substances such as butane, gasoline, natural gas and propane.

T Ratings:

HAZLED™ 26W model is T3C rated

Lens/Globes:

Clear flat glass lens

Equivalency:

The HAZXLED26 is equivalent in delivered lumens to a 70 Watt metal halide.

California Title 24:

26 Watt HAZLED complies with 2013 California Title 24 building and electrical codes as a commercial outdoor non-pole-mounted fixture ≤ 30 Watts when used with a remote mounted photosensor control.

Country of Origin:

Designed by RAB in New Jersey and assembled in the USA by RAB's IBEW Local 3 workers.

Buy American Act Compliant:

This product is a COTS item manufactured in the United States, and is compliant with the Buy American Act.

Recovery Act (ARRA) Compliant:

This product complies with the 52.225-21 "Required Use of American Iron, Steel, and Manufactured Goods-- Buy American Act-- Construction Materials (October 2010).

Trade Agreements Act Compliant:

This product is a COTS item manufactured in the United States, and is compliant with the Trade Agreements Act.

GSA Schedule:

Suitable in accordance with FAR Subpart 25.4.

LED Characteristics

LEDs:

Multi-chip, high-output, long-life LEDs

Lifespan:

100,000-hour LED lifespan based on IES LM-80 results and TM-21 calculations.

Color Stability:

LED color temperature is warrantied to shift no more than 200K in CCT over a 5 year period.

Color Uniformity:

RAB's range of CCT (Correlated Color Temperature) follows the guidelines of the American National Standard for Specifications for the Chromaticity of Solid State Lighting (SSL) Products, ANSI C78.377-2011.

Construction

IP Rating:

Ingress Protection rating of IP66 for dust and water.

Maximum Ambient Temperature:

55° C (131° F)

Thermal Management:

Superior heat sinking with external Air-Flow fins

Housing:

Die-cast aluminum housing, lens frame and mounting arm

Hardware:

All external hardware is stainless steel

Reflector:

Semi-specular aluminum

Mounting:

Ceiling mounting with (2) steel lugs

Gaskets:

Closed cell silicone gasket

Finish:

Our environmentally friendly polyester powder coatings are formulated for high-durability and long-lasting color, and contain no VOC or toxic heavy metals.

Copyright © 2014 RAB Lighting Inc. All Rights Reserved Note: Specifications are subject to change at any time without notice

Technical Specifications (continued)

Construction

Green Technology:

Mercury and UV free, and RoHS compliant. Polyester power coat finish formulated without the use of VOC or toxic heavy metals.

Electrical

Driver:

Constant Current, Class 2, 100-277V, 50/60 Hz, 700mA, THD <20%, Power Factor 95%

Listings

IESNA LM-79 & LM-80 Testing:

RAB LED luminaires have been tested by an independent laboratory in accordance with IESNA LM-79 and LM-80, and have received the Department of Energy "Lighting Facts" label.

Optical

BUG Rating:

B1 U0 G0

Dimensions

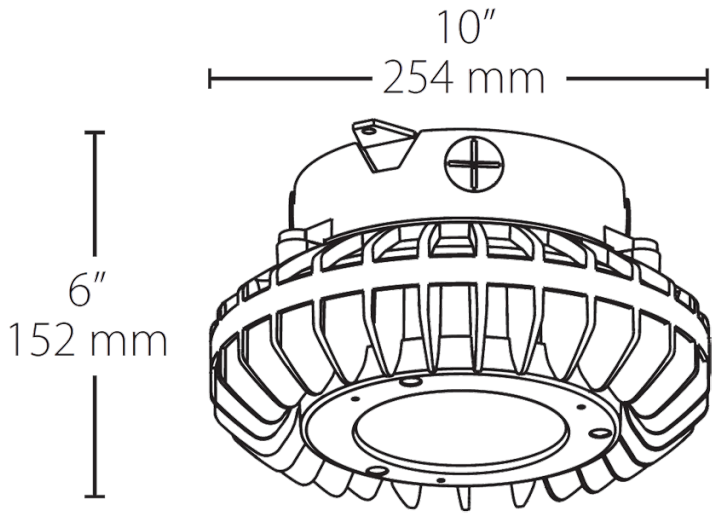

Features

- Class 1, Division2, Groups A, B, C, D
- IP66, UL1958, UL8750 and UL 844 ratings
- Resistant to shock and vibration
- Rugged construction ensures long-life and safe operation
- 100,000-Hour LED lifespan
- 5-Year, no-compromise warranty

Ordering Matrix

Family	Watts	Lens	Globes	Guard
HAZXLED				
	26 = 26W	= No lens	= No globes	= No guard
	42 = 42W	**CF** = Clear lens	**C** = Clear globes	**#NAME?** = Die cast guard
		FF = Frosted lens	**F** = Frosted globes	

Copyright © 2014 RAB Lighting Inc. All Rights Reserved Note: Specifications are subject to change at any time without notice