GN4LED13YRST11G

13 & 26 Watt Straight Shade LED Gooseneck Luminaire designed to match the architecture of Main Street storefronts and building perimeters. LED Gooseneck Straight Shade with Wall 20" High, 19" from Wall Goose Arm Style 4.

Color: Hunter green

Weight: 16.0 lbs

Project:	Type:
Prepared By:	Date:

Driver Info

Type:	Constant Current
120V:	0.3A
208V:	0.3A
240V:	0.3A
277V:	0.15A
Input Watts:	16W
Efficiency:	83%

LED Info

Watts:	13W
Color Temp:	3000K (Warm)
Color Accuracy:	87 CRI
L70 Lifespan:	100,000
LM79 Lumens:	514
Efficacy:	33 LPW

Technical Specifications

LED Characteristics

Color Accuracy (CRI):

CRI can change due to the fixture color. Please contact the RAB Lighting Design department for more details.

Lifespan:

100,000-hour LED lifespan based on IES LM-80 results and TM-21 calculations.

LED:

Single multi-chip, 13W high-output, long-life LED.

Correlated Color Temp. (Nominal CCT):

3000K

Color Stability:

LED color temperature is warrantied to shift no more than 200K in CCT over a 5 year period.

Color Uniformity:

RAB's range of CCT (Correlated color temperature) follows the guidelines of the American National Standard for Specifications for the Chromaticity of Solid State Lighting (SSL) Products, ANSI C78.377-2008.

Listings

UL Listing:

Suitable for wet locations. Suitable for mounting within 1.2m (4ft) of the ground.

Sensor Characteristics

Lead Time:

3 weeks expedited shipping. 6 weeks standard shipping.

Construction

Fixture:

The GN4LED13YRST11G comes with the GOOSE4G Arm.

Thermal Management:

Custom heat sink assembly in thermal contact with die-cast aluminum housing for superior heat sinking.

Housing:

Precision die-cast aluminum housing, lens frame and mounting plate.

Gaskets:

High Temperature Silicone

Mounting:

Heavy-duty mounting arm with "O" ring seal and stainless steel screw.

Cold Weather Starting:

The minimum starting temperature is -40°F/-40°C

Finish:

Our environmentally friendly polyester powder coatings are formulated for high-durability and long-lasting color, and contains no VOC or toxic heavy metals. Offers significantly improved gloss retention and resistance to color change.

Green Technology:

Mercury and UV free, and RoHS compliant. Polyester powder coat finish formulated without the use of VOC or toxic heavy metals.

Electrical

Driver:

Constant Current, Class 2, 100-277V, 50/60 Hz, 100-240VAC 0.3 - 0.15A, 277VAC 0.15A, THD ≤20%, PF 97.5%.

Surge Protection:

4kv

Other

Shades:

11" Straight Shade offered.

IESNA LM-79 & IESNA LM-80 Testing:

RAB LED luminaires have been tested by an independent laboratory in accordance with IESNA LM-79 and 80, and have received the Department of Energy "Lighting Facts" label.

Warranty:

RAB warrants that our LED products will be free from defects in materials and workmanship for a period of five (5) years from the date of delivery to the end user, including coverage of light output, color stability, driver performance and fixture finish. See our full warranty

Country of Origin:

Designed by RAB in New Jersey and assembled in Taiwan.

Trade Agreements Act Compliant:

This product is a product of Taiwan and a "designated country" end product that complies with the Trade Agreements Act.

GSA Schedule:

Suitable in accordance with FAR Subpart 25.4.

Custom

Equivalency:

The GNLED13 is equivalent in delivered lumens to 75W incandescent, 50W MH or 18W CFL.

California Title 24:

Goosenecks complies with 2013 California Title 24 building and electrical codes as a commercial outdoor non-pole-mounted fixture < 30 Watts when used with a photosensor control. Select catalog number PCS900(120V) or PCS900/277 to order a photosensor.

Copyright © 2014 RAB Lighting Inc. All Rights Reserved Note: Specifications are subject to change at any time without notice

Technical Specifications (continued)

Custom

Patents:

The design of the Gooseneck is protected by patents pending in US, Canada, China and Taiwan.

Dimensions

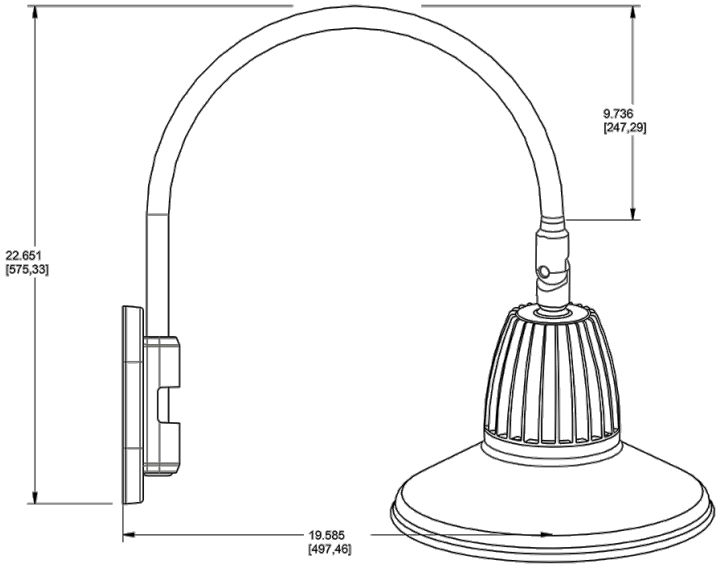

Features

- Adjustable 45° swivel joint
- Superior heat sink
- Die-cast aluminum housing
- 5 year LED warranty

Ordering Matrix

Family	Watts	Color Temp	Reflector	Shade	ShadeSize	Finish
GN4LED						
	13 = 13W **26** = 26W	**Y** = 3000K **N** = 4000K	**Blank** = Flood **R** = Rectangular **S** = Spot	**ST** = Straight Shade	**11** = 11" **Blank** = 15"	**B** = Black **W** = White **A** = Bronze **S** = Silver **G** = Hunter Green **YL** = Yellow **LB** = Light Blue **BL** = Royal Blue **BWN** = Brown **I** = Ivory **R** = Red

Copyright © 2014 RAB Lighting Inc. All Rights Reserved Note: Specifications are subject to change at any time without notice