# GN1LED26NSB

13 & 26 Watt No Shade LED Gooseneck Luminaire designed to match the architecture of Main Street storefronts and building perimeters. LED Gooseneck No Shade with 24" Goose Arm Style 1.

Color: Black

Weight: 10.2 lbs

| Project: | Type: |
|---|---|
| Prepared By: | Date: |

| Driver Info | | LED Info | |
|---|---|---|---|
| Type: | Constant Current | Watts: | 26W |
| 120V: | 0.25A | Color Temp: | 4000K (Neutral) |
| 208V: | 0.16A | Color Accuracy: | 85 CRI |
| 240V: | 0.14A | L70 Lifespan: | 100,000 |
| 277V: | 0.12A | LM79 Lumens: | 1,552 |
| Input Watts: | 28W | Efficacy: | 55 LPW |
| Efficiency: | 92% | | |

## Technical Specifications

### Listings

**UL Listing:**

Suitable for wet locations. Suitable for mounting within 1.2m (4ft) of the ground.

**IESNA LM-79 & IESNA LM-80 Testing:**

RAB LED luminaires have been tested by an independent laboratory in accordance with IESNA LM-79 and 80, and have received the Department of Energy "Lighting Facts" label.

### LED Characteristics

**Lifespan:**

100,000-hour LED lifespan based on IES LM-80 results and TM-21 calculations.

**LED:**

Single multi-chip, 26W high-output, long-life LED.

**Correlated Color Temp. (Nominal CCT):**

4000K

**Color Stability:**

LED color temperature is warrantied to shift no more than 200K in CCT over a 5 year period.

**Color Uniformity:**

RAB's range of CCT (Correlated color temperature) follows the guidelines of the American National Standard for Specifications for the Chromaticity of Solid State Lighting (SSL) Products, ANSI C78.377-2008.

### Construction

**Fixture:**

The GN1LED26NSB comes with the GOOSE1B Arm.

**Thermal Management:**

Custom heat sink assembly in thermal contact with die-cast aluminum housing for superior heat sinking.

**Housing:**

Precision die-cast aluminum housing, lens frame and mounting plate.

**Gaskets:**

High Temperature Silicone

**Mounting:**

Heavy-duty mounting arm with "O" ring seal and stainless steel screw.

**Cold Weather Starting:**

The minimum starting temperature is -40°F/-40°C

**Finish:**

Our environmentally friendly polyester powder coatings are formulated for high-durability and long-lasting color, and contains no VOC or toxic heavy metals. Offers significantly improved gloss retention and resistance to color change.

**Green Technology:**

Mercury and UV free, and RoHS compliant. Polyester powder coat finish formulated without the use of VOC or toxic heavy metals.

### Electrical

**Driver:**

Constant Current, Class 2, 100-277V, 50/60 Hz, 0.48 A, PF 97.9%.

**THD:**

11.8% at 120V

**Surge Protection:**

4kv

### Other

**Equivalency:**

The GNLED26 is equivalent in delivered lumens 120W incandescent, 75W MH or 42W CFL.

**California Title 24:**

Goosenecks complies with 2013 California Title 24 building and electrical codes as a commercial outdoor non-pole-mounted fixture < 30 Watts when used with a photosensor control. Select catalog number PCS900(120V) or PCS900/277 to order a photosensor.

**Patents:**

The design of the Gooseneck is protected by patents pending in US, Canada, China and Taiwan.

**Warranty:**

RAB warrants that our LED products will be free from defects in materials and workmanship for a period of five (5) years from the date of delivery to the end user, including coverage of light output, color stability, driver performance and fixture finish.

**Country of Origin:**

Designed by RAB in New Jersey and assembled in the USA by RAB's IBEW Local 3 workers.

**Buy American Act Compliant:**

This product is a COTS item manufactured in the United States, and is compliant with the Buy American Act.

**Recovery Act (ARRA) Compliant:**

This product complies with the 52.225-21 "Required Use of American Iron, Steel, and Manufactured Goods-- Buy American Act-- Construction Materials (October 2010)

**Trade Agreements Act Compliant:**

This product is a COTS item manufactured in the United States, and is compliant with the Trade Agreements Act.


Copyright © 2014 RAB Lighting Inc. All Rights Reserved Note: Specifications are subject to change at any time without notice

## Technical Specifications (continued)

### Other

**GSA Schedule:**

Suitable in accordance with FAR Subpart 25.4

### Dimensions

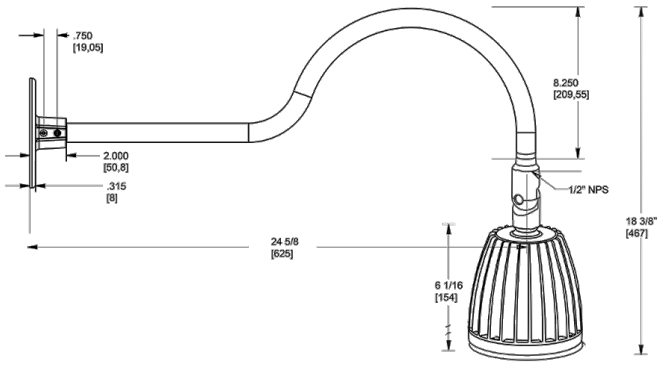


### Features

- Adjustable 45° swivel joint
- Superior heat sink
- Die-cast aluminum housing
- 5 year LED warranty

### Ordering Matrix

| Family | Watts | Color Temp | Reflector | Shade | ShadeSize | Finish |
|---|---|---|---|---|---|---|
| GN1LED | | | | | | |
| | **13** = 13W<br>**26** = 26W | **Y** = 3000K<br>**N** = 4000K | **Blank** = Flood<br>**R** = Rectangular<br>**S** = Spot | **Blank** = No Shade | **Blank** = No Shade Size | **B** = Black<br>**W** = White<br>**A** = Bronze<br>**S** = Silver<br>**G** = Hunter Green<br>**YL** = Yellow<br>**LB** = Light Blue<br>**BL** = Royal Blue<br>**BWN** = Brown<br>**I** = Ivory<br>**R** = Red |


Copyright © 2014 RAB Lighting Inc. All Rights Reserved Note: Specifications are subject to change at any time without notice