LOT5T65/480/D10/5PR

Specification grade area lights available in IES Type V distributions. Wide and uniform 360 degree pattern ideal for large outdoor areas such as parking lots, corporate parks, and retail settings. Best-in-class 5-G vibration rating. 5-year warranty.

Color: Bronze

Weight: 20.9 lbs

Project:	Type:
Prepared By:	Date:

Driver Info		LED Info	
Type:	Constant Current	Watts:	65W
120V:	N/A	Color Temp:	5000K
208V:	N/A	Color Accuracy:	72 CRI
240V:	N/A	L70 Lifespan:	100000
277V:	N/A	Lumens:	7,542
Input Watts:	67W	Efficacy:	111 LPW
Efficiency:	96%		

Technical Specifications

Listings

UL Listing:

Suitable for wet locations.

IESNA LM-79 & IESNA LM-80 Testing:

RAB LED luminaires have been tested by an independent laboratory in accordance with IESNA LM-79 and 80, and have received the Department of Energy "Lighting Facts" label.

Electrical

Driver:

Constant Current, Class 2, 480V, 50/60 Hz, 480V: 0.15A

THD:

13.8% at 480V

Power Factor:

94.3% at 480V

5-Pin Receptacle:

ANSI C136.41 5-pin receptacle, compatible with wireless control systems

Dimming Driver:

Driver includes dimming control wiring for 0-10V dimming systems. Requires separate 0-10V DC dimming circuit. Dims as low as 10%.

Surge Protection:

4kV

Optical

Lifespan:

100,000-hour LED lifespan based on IES LM-80 results and TM-21 calculations.

Full Cutoff:

Full cutoff optics conform with dark sky requirements.

Construction

IES Classification:

The Type V distribution produces light in a wide and uniform 360° pattern that is perfect for large outdoor areas such as parking lots, corporate parks and retail settings.

Effective Projected Area:

EPA = 0.8

Vibration Rating:

Industry-leading 5G vibration rating per ANSI C136.31.

Cold Weather Starting:

Minimum starting temperature is -40° F (-40° C)

Ambient Temperature:

Suitable for use in 104° F (40° C) ambient temperatures.

Housing:

Precision die-cast aluminum housing.

Mounting:

Mounts to RAB square poles. Mounts to all square and round poles if optional Universal Pole Adaptor is used.

Lens:

Clear acrylic lens with integrated optics

IP Rating:

Ingress Protection rating of IP66 for dust and water

Gaskets:

High temperature silicone gaskets.

Finish:

Formulated for high-durability and long lasting color.

Green Technology:

Mercury and UV free. RoHS compliant components. Polyester powder coat finish formulated without the use of VOC or toxic heavy metals.

LED Characteristics

LEDs:

Long-life, high-efficiency surface mounting LEDs

Color Stability:

LED color temperature is warrantied to shift no more than 200K in CCT over a 5 year period.

Color Uniformity:

RAB's range of CCT (Correlated Color Temperature) follows the guidelines of the American National Standard for Specifications for the Chromaticity of Solid State Lighting (SSL) Products, ANSI C78.377-2015.

Other

5 Yr Limited Warranty:

Fixture operation and paint finish are covered for a period of 5 years.

Copyright © 2014 RAB Lighting Inc. All Rights Reserved Note: Specifications are subject to change at any time without notice

Technical Specifications (continued)

Other

Replacement:

Replaces 150W Metal Halide.

Country of Origin:

Designed by RAB in New Jersey and assembled in the USA by RAB's IBEW Local 3 workers.

Buy American Act Compliant:

This product is a COTS item manufactured in the United States, and is compliant with the Buy American Act.

Recovery Act (ARRA) Compliant:

This product complies with the 52.225-21 "Required Use of American Iron, Steel, and Manufactured Goods-- Buy American Act-- Construction Materials (October 2010).

GSA Schedule:

Suitable in accordance with FAR Subpart 25.4.

Dimensions

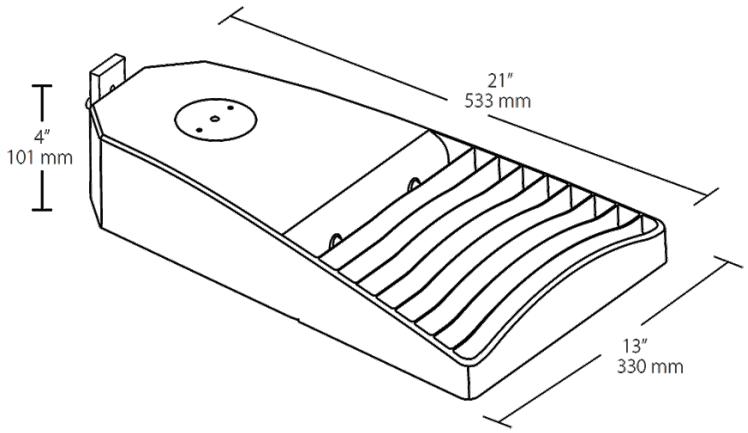

Features

- Lightweight design and low EPA minimize pole load
- Best-in-class 5-G vibration rating
- 100,000-hour LED lifespan
- 5-year warranty

Ordering Matrix

Family	IES Type	Wattage	Color Temp	Finish	Driver Options	Mounting	Sensor Options
LOT	5T	65			/480/D10		/5PR
	5T = Type V	**160** = 160W **110** = 110W **65** = 65W	**Blank** = 5000K (Cool) **N** = 4000K (Neutral) **Y** = 3000K (Warm)	**Blank** = Bronze **W** = White	**/D10** = 120-277V, 0-10V Dimming (standard) **/480/D10** = 480V, 0-10V Dimming	**Blank** = Mounts to RAB square poles **/UPA** = Universal Pole Adaptor	**Blank** = None **/PCT** = 120-277V Twistlock PC **/PCT4** = 480V Twistlock PC **/WS2** = Wattstopper Sensor + 20ft lens, 120-277V **/WS4** = Wattstopper Sensor + 40ft lens, 120-277V **/5PR** = 5-Pin Receptacle, no PCT **/7PR** = 7-Pin Receptacle, no PCT **/BL** = Bi-Level Dimming, 120-277V

Copyright © 2014 RAB Lighting Inc. All Rights Reserved Note: Specifications are subject to change at any time without notice