# LOT4T110NW/D10/UPA/PCT

Specification grade area lights available in IES Type IV distributions. Suited for mounting on the sides of buildings and walls, and for illuminating the perimeter of parking areas. Best-in-class 5-G vibration rating. 5 Year Warranty.

Color: White

Weight: 22.7 lbs

| Project: | Type: |
|---|---|
| Prepared By: | Date: |

**Driver Info**

| | |
|---|---|
| Type: | Constant Current |
| 120V: | 0.93A |
| 208V: | 0.56A |
| 240V: | 0.49A |
| 277V: | 0.42A |
| Input Watts: | 109W |
| Efficiency: | N/A |

**LED Info**

| | |
|---|---|
| Watts: | 110W |
| Color Temp: | 4000K |
| Color Accuracy: | 72 CRI |
| L70 Lifespan: | 100000 |
| Lumens: | 11,230 |
| Efficacy: | 104 LPW |

## Technical Specifications

### Listings

**UL Listing:**

Suitable for wet locations.

**IESNA LM-79 & IESNA LM-80 Testing:**

RAB LED luminaires have been tested by an independent laboratory in accordance with IESNA LM-79 and 80, and have received the Department of Energy "Lighting Facts" label.

### Electrical

**Driver:**

Constant Current, Class 2, 100-277V, 50/60 Hz, 120V: 0.93A, 208V: 0.56A, 240V: 0.49A, 277V: 0.42A

**Photocell:**

120-277V Twistlock Photocell Included. Photocell is compatible with 120V-277V.

**THD:**

6.7% at 120, 9.1% at 277V

**Power Factor:**

99.3% at 120V, 95.4% at 277V

**Dimming Driver:**

Driver includes dimming control wiring for 0-10V dimming systems. Requires separate 0-10V DC dimming circuit. Dims as low as 10%.

**Surge Protection:**

L-N 4kV; L-Earth 6kV

### Optical

**Lifespan:**

100,000-hour LED lifespan based on IES LM-80 results and TM-21 calculations.

**Full Cutoff:**

Full cutoff optics conform with dark sky requirements.

### Construction

**IES Classification:**

The Type IV distribution (also known as a Forward Throw) produces a semicircular distribute, and is especially suited for mounting on sides of buildings or walls and perimeter of parking areas.

**Effective Projected Area:**

EPA = 0.8

**Vibration Rating:**

Industry-leading 5G vibration rating per ANSI C136.31.

**Cold Weather Starting:**

Minimum starting temperature is -40° F (-40° C)

**Ambient Temperature:**

Suitable for use in 104° F (40° C) ambient temperatures.

**Housing:**

Precision die-cast aluminum housing.

**Mounting:**

Mounts to all square and round poles.

**Lens:**

Clear acrylic lens with integrated optics

**IP Rating:**

Ingress Protection rating of IP66 for dust and water

**Gaskets:**

High temperature silicone gaskets.

**Finish:**

Formulated for high-durability and long lasting color.

**Green Technology:**

Mercury and UV free. RoHS compliant components. Polyester powder coat finish formulated without the use of VOC or toxic heavy metals.

### LED Characteristics

**LEDs:**

Long-life, high-efficiency surface mounting LEDs

**Color Stability:**

LED color temperature is warrantied to shift no more than 200K in CCT over a 5 year period.

**Color Uniformity:**

RAB's range of CCT (Correlated Color Temperature) follows the guidelines of the American National Standard for Specifications for the Chromaticity of Solid State Lighting (SSL) Products, ANSI C78.377-2015.

### Other

**5 Yr Limited Warranty:**

Fixture operation and paint finish are covered for a period of 5 years.



Copyright © 2014 RAB Lighting Inc. All Rights Reserved Note: Specifications are subject to change at any time without notice

## Technical Specifications (continued)

### Other

**Replacement:**

Replaces up to 250W Metal Halide.

**Country of Origin:**

Designed by RAB in New Jersey and assembled in the USA by RAB's IBEW Local 3 workers.

**Buy American Act Compliant:**

This product is a COTS item manufactured in the United States, and is compliant with the Buy American Act.

**Recovery Act (ARRA) Compliant:**

This product complies with the 52.225-21 "Required Use of American Iron, Steel, and Manufactured Goods-- Buy American Act-- Construction Materials (October 2010).

**GSA Schedule:**

Suitable in accordance with FAR Subpart 25.4.

### Dimensions

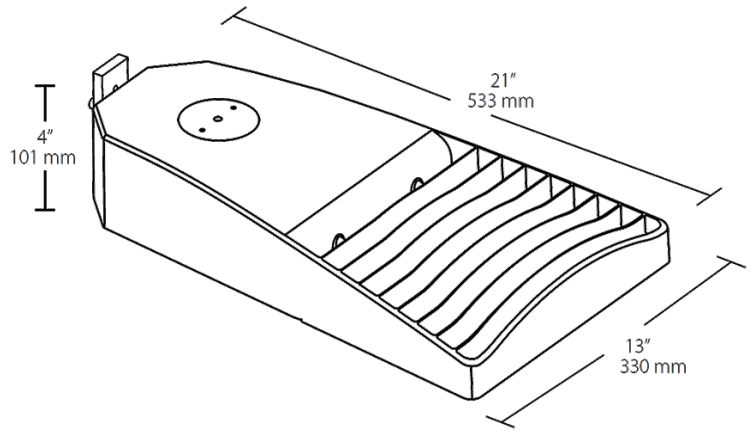


### Features

100,000-hour LED lifespan

Type IV distribution

5-year warranty

### Ordering Matrix

| Family | IES Type | Wattage | Color Temp | Finish | Driver Options | Mounting | Sensor Options | Accessories |
|---|---|---|---|---|---|---|---|---|
| LOT | 4T | 110 | N | W | /D10 | /UPA | /PCT | |
| | **4T** = Type IV | **160** = 160W<br>**110** = 110W<br>**65** = 65W | **Blank** = 5000K (Cool)<br>**N** = 4000K (Neutral)<br>**Y** = 3000K (Warm) | **Blank** = Bronze<br>**W** = White | **/D10** = 120-277V, 0-10V Dimming (standard)<br>**/480/D10** = 480V, 0-10V Dimming | **Blank** = Mounts to RAB square poles<br>**/UPA** = Universal Pole Adaptor | **Blank** = None<br>**/PCT** = 120-277V Twistlock PC<br>**/PCT4** = 480V Twistlock PC<br>**/WS2** = Wattstopper Sensor + 20ft lens, 120-277V<br>**/WS4** = Wattstopper Sensor + 40ft lens, 120-277V<br>**/5PR** = 5-Pin Receptacle, no PCT<br>**/7PR** = 7-Pin Receptacle, no PCT<br>**/BL** = Bi-Level Dimming, 120-277V | **Blank** = None<br>**/HS** = 2 House-Side-Shields |


Copyright © 2014 RAB Lighting Inc. All Rights Reserved Note: Specifications are subject to change at any time without notice