LOT4T110NW/480/D10/UPA

Specification grade area lights available in IES Type IV distributions. Suited for mounting on the sides of buildings and walls, and for illuminating the perimeter of parking areas. Best-in-class 5-G vibration rating. 5 Year Warranty.

Color: White Weight: 22.7 lbs

Project:	Type:
Prepared By:	Date:

Driver Info		LED Info	
Type:	Constant Current	Watts:	110W
120V:	N/A	Color Temp:	4000K
208V:	N/A	Color Accuracy:	72 CRI
240V:	N/A	L70 Lifespan:	100000
277V:	N/A	Lumens:	11,572
Input Watts:	113W	Efficacy:	103 LPW
Efficiency:	98%		

Technical Specifications

Listings

UL Listing:

Suitable for wet locations.

IESNA LM-79 & IESNA LM-80 Testing:

RAB LED luminaires have been tested by an independent laboratory in accordance with IESNA LM-79 and 80, and have received the Department of Energy "Lighting Facts" label.

Electrical

Driver:

Constant Current, Class 2, 480V, 50/60 Hz, 480V: 0.26A

THD:

14.2% at 480V

Power Factor:

92.3% at 480V

Dimming Driver:

Driver includes dimming control wiring for 0-10V dimming systems. Requires separate 0-10V DC dimming circuit. Dims as low as 10%.

Surge Protection:

4kV

Optical

Lifespan:

100,000-hour LED lifespan based on IES LM-80 results and TM-21 calculations.

Full Cutoff:

Full cutoff optics conform with dark sky requirements.

Construction

IES Classification:

The Type IV distribution (also known as a Forward Throw) produces a semicircular distribute, and is especially suited for mounting on sides of buildings or walls and perimeter of parking areas.

Effective Projected Area:

EPA = 0.8

Vibration Rating:

Industry-leading 5G vibration rating per ANSI C136.31.

Cold Weather Starting:

Minimum starting temperature is -40° F (-40° C)

Ambient Temperature:

Suitable for use in 104° F (40° C) ambient temperatures.

Housing:

Precision die-cast aluminum housing.

Mounting:

Mounts to all square and round poles.

Lens:

Clear acrylic lens with integrated optics

IP Rating:

Ingress Protection rating of IP66 for dust and water

Gaskets:

High temperature silicone gaskets.

Finish:

Formulated for high-durability and long lasting color.

Green Technology:

Mercury and UV free. RoHS compliant components. Polyester powder coat finish formulated without the use of VOC or toxic heavy metals.

LED Characteristics

LEDs:

Long-life, high-efficiency surface mounting LEDs

Color Stability:

LED color temperature is warrantied to shift no more than 200K in CCT over a 5 year period.

Color Uniformity:

RAB's range of CCT (Correlated Color Temperature) follows the guidelines of the American National Standard for Specifications for the Chromaticity of Solid State Lighting (SSL) Products, ANSI C78.377-2015.

Other

5 Yr Limited Warranty:

Fixture operation and paint finish are covered for a period of 5 years.

Replacement:

Replaces up to 250W Metal Halide.

Copyright © 2014 RAB Lighting Inc. All Rights Reserved Note: Specifications are subject to change at any time without notice

Technical Specifications (continued)

Other

Country of Origin:

Designed by RAB in New Jersey and assembled in the USA by RAB's IBEW Local 3 workers.

Buy American Act Compliant:

This product is a COTS item manufactured in the United States, and is compliant with the Buy American Act.

Recovery Act (ARRA) Compliant:

This product complies with the 52.225-21 "Required Use of American Iron, Steel, and Manufactured Goods-- Buy American Act-- Construction Materials (October 2010).

GSA Schedule:

Suitable in accordance with FAR Subpart 25.4.

Dimensions

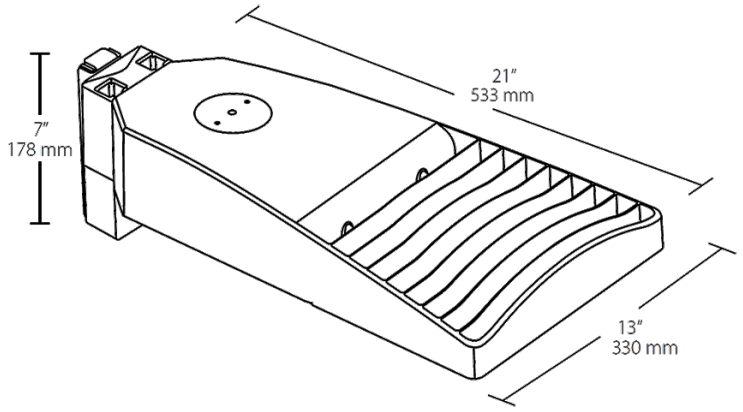

Features

- 100,000-hour LED lifespan
- Type IV distribution
- 5-year warranty

Ordering Matrix

Family	IES Type	Wattage	Color Temp	Finish	Driver Options	Mounting	Sensor Options	Accessories
LOT	4T	110	N	W	/480/D10	/UPA		
	4T = Type IV	**160** = 160W **110** = 110W **65** = 65W	**Blank** = 5000K (Cool) **N** = 4000K (Neutral) **Y** = 3000K (Warm)	**Blank** = Bronze **W** = White	**/D10** = 120-277V, 0-10V Dimming (standard) **/480/D10** = 480V, 0-10V Dimming	**Blank** = Mounts to RAB square poles **/UPA** = Universal Pole Adaptor	**Blank** = None **/PCT** = 120-277V Twistlock PC **/PCT4** = 480V Twistlock PC **/WS2** = Wattstopper Sensor + 20ft lens, 120-277V **/WS4** = Wattstopper Sensor + 40ft lens, 120-277V **/5PR** = 5-Pin Receptacle, no PCT **/7PR** = 7-Pin Receptacle, no PCT **/BL** = Bi-Level Dimming, 120-277V	**Blank** = None **/HS** = 2 House-Side-Shields

Copyright © 2014 RAB Lighting Inc. All Rights Reserved Note: Specifications are subject to change at any time without notice