LOT3T110W/D10/UPA/PCT

Specification grade area lights available in IES Type III distributions. For use for roadway, general parking and other area lighting applications where a larger pool of lighting is required. Best-in-class 5-G vibration rating. 5 Year Warranty.

Color: White Weight: 22.7 lbs

Project:	Type:
Prepared By:	Date:

Driver Info

Type:	Constant Current
120V:	0.93A
208V:	0.56A
240V:	0.49A
277V:	0.42A
Input Watts:	110W
Efficiency:	N/A

LED Info

Watts:	110W
Color Temp:	5000K
Color Accuracy:	72 CRI
L70 Lifespan:	100000
Lumens:	12,807
Efficacy:	116 LPW

Technical Specifications

Listings

UL Listing:

Suitable for wet locations.

IESNA LM-79 & IESNA LM-80 Testing:

RAB LED luminaires have been tested by an independent laboratory in accordance with IESNA LM-79 and 80, and have received the Department of Energy "Lighting Facts" label.

Electrical

Driver:

Constant Current, Class 2, 100-277V, 50/60 Hz, 120V: 0.93A, 208V: 0.56A, 240V: 0.49A, 277V: 0.42A

Photocell:

120-277V Twistlock Photocell Included. Photocell is compatible with 120V-277V.

THD:

6.7% at 120, 9.1% at 277V

Power Factor:

99.3% at 120V, 95.4% at 277V

Dimming Driver:

Driver includes dimming control wiring for 0-10V dimming systems. Requires separate 0-10V DC dimming circuit. Dims as low as 10%.

Surge Protection:

L-N 4kV; L-Earth 6kV

Optical

Lifespan:

100,000-hour LED lifespan based on IES LM-80 results and TM-21 calculations.

Full Cutoff:

Full cutoff optics conform with dark sky requirements.

Construction

IES Classification:

The Type III distribution is meant to be located near the side of an area, projecting the light outward to fill the area. Ideal for roadways, general parking areas, lighting applications and where a large pool of light is required.

Effective Projected Area:

EPA = 0.8

Vibration Rating:

Industry-leading 5G vibration rating per ANSI C136.31.

Cold Weather Starting:

Minimum starting temperature is -40° F (-40° C)

Ambient Temperature:

Suitable for use in 104° F (40° C) ambient temperatures.

Housing:

Precision die-cast aluminum housing.

Mounting:

Mounts to all square and round poles.

Lens:

Clear acrylic lens with integrated optics

IP Rating:

Ingress Protection rating of IP66 for dust and water

Gaskets:

High temperature silicone gaskets.

Finish:

Formulated for high-durability and long lasting color.

Green Technology:

Mercury and UV free. RoHS compliant components. Polyester powder coat finish formulated without the use of VOC or toxic heavy metals.

LED Characteristics

LEDs:

Long-life, high-efficiency surface mounting LEDs

Color Stability:

LED color temperature is warrantied to shift no more than 200K in CCT over a 5 year period.

Color Uniformity:

RAB's range of CCT (Correlated Color Temperature) follows the guidelines of the American National Standard for Specifications for the Chromaticity of Solid State Lighting (SSL) Products, ANSI C78.377-2015.

Other

5 Yr Limited Warranty:

Fixture operation and paint finish are covered for a period of 5 years.

Copyright © 2014 RAB Lighting Inc. All Rights Reserved Note: Specifications are subject to change at any time without notice

Technical Specifications (continued)

Other

Replacement:

Replaces up to 250W Metal Halide.

Country of Origin:

Designed by RAB in New Jersey and assembled in the USA by RAB's IBEW Local 3 workers.

Buy American Act Compliant:

This product is a COTS item manufactured in the United States, and is compliant with the Buy American Act.

Recovery Act (ARRA) Compliant:

This product complies with the 52.225-21 "Required Use of American Iron, Steel, and Manufactured Goods-- Buy American Act-- Construction Materials (October 2010).

GSA Schedule:

Suitable in accordance with FAR Subpart 25.4.

Dimensions

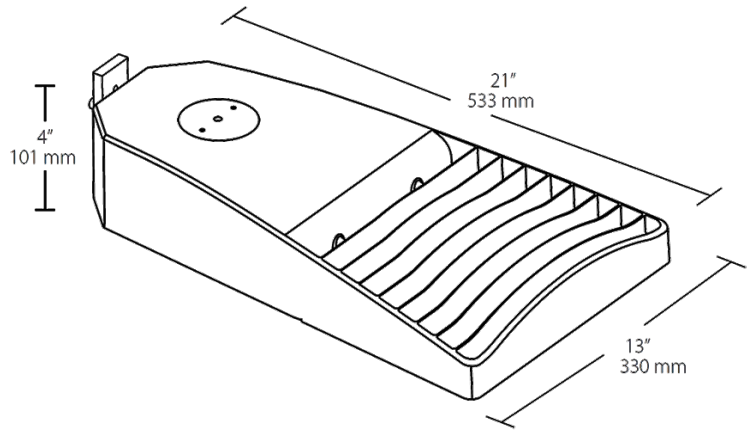

Features

- Lightweight design and low EPA minimize pole load
- Best-in-class 5-G vibration rating
- 100,000-hour LED lifespan
- 5-year warranty

Ordering Matrix

Family	IES Type	Wattage	Color Temp	Finish	Driver Options	Mounting	Sensor Options	Accessories
LOT	3T	110		W	/D10	/UPA	/PCT	
	3T = Type III	**160** = 160W **110** = 110W **65** = 65W	**Blank** = 5000K (Cool) **N** = 4000K (Neutral) **Y** = 3000K (Warm)	**Blank** = Bronze **W** = White	**/D10** = 120-277V, 0-10V Dimming (standard) **/480/D10** = 480V, 0-10V Dimming	**Blank** = Mounts to RAB square poles **/UPA** = Universal Pole Adaptor	**Blank** = None **/PCT** = 120-277V Twistlock PC **/PCT4** = 480V Twistlock PC **/WS2** = Wattstopper Sensor + 20ft lens, 120-277V **/WS4** = Wattstopper Sensor + 40ft lens, 120-277V **/5PR** = 5-Pin Receptacle, no PCT **/7PR** = 7-Pin Receptacle, no PCT **/BL** = Bi-Level Dimming, 120-277V	**Blank** = None **/HS** = 2 House-Side-Shields

Copyright © 2014 RAB Lighting Inc. All Rights Reserved Note: Specifications are subject to change at any time without notice