# LOT2T160N/480/D10/HS

Specification grade area lights available in IES Type II distributions. For use in parking lots, roadways, pathways and general area lighting. Best-in-class 5-G vibration rating. 5-year warranty.

Color: Bronze

Weight: 20.9 lbs

| Project: | Type: |
|---|---|
| Prepared By: | Date: |

**Driver Info**

| | |
|---|---|
| Type: | Constant Current |
| 120V: | N/A |
| 208V: | N/A |
| 240V: | N/A |
| 277V: | N/A |
| Input Watts: | 154W |
| Efficiency: | N/A |

**LED Info**

| | |
|---|---|
| Watts: | 160W |
| Color Temp: | 4000K |
| Color Accuracy: | 72 CRI |
| L70 Lifespan: | 100000 |
| Lumens: | 12,146 |
| Efficacy: | 79 LPW |

## Technical Specifications

### Listings

**UL Listing:**

Suitable for wet locations.

**IESNA LM-79 & IESNA LM-80 Testing:**

RAB LED luminaires have been tested by an independent laboratory in accordance with IESNA LM-79 and 80, and have received the Department of Energy "Lighting Facts" label.

### Electrical

**Driver:**

Constant Current, Class 2, 480V, 50/60 Hz, 480V: 0.35A

**THD:**

10% at 480V

**Power Factor:**

99% at 480V

**Surge Protection:**

L-N 4kV; L-Earth 6kV

**Dimming Driver:**

Driver includes dimming control wiring for 0-10V dimming systems. Requires separate 0-10V DC dimming circuit. Dims as low as 10%.

### Optical

**Lifespan:**

100,000-hour LED lifespan based on IES LM-80 results and TM-21 calculations.

**Full Cutoff:**

Full cutoff optics conform with dark sky requirements.

### Construction

**IES Classification:**

The Type II distribution is meant for lighting large areas, located by the roadside. Typically found on wide walkways, on ramps, entrace roadways and bike paths.

**Effective Projected Area:**

EPA = 0.8

**Vibration Rating:**

Industry-leading 5G vibration rating per ANSI C136.31.

**Cold Weather Starting:**

Minimum starting temperature is -40° F (-40° C)

**Ambient Temperature:**

Suitable for use in 104° F (40° C) ambient temperatures.

**Housing:**

Precision die-cast aluminum housing.

**House Side Shield:**

External house-side shield accessory included to reduce light trespass.

**Mounting:**

Mounts to RAB square poles. Mounts to all square and round poles if optional Universal Pole Adaptor is used.

**Lens:**

Clear acrylic lens with integrated optics

**IP Rating:**

Ingress Protection rating of IP66 for dust and water

**Gaskets:**

High temperature silicone gaskets.

**Finish:**

Formulated for high-durability and long lasting color.

**Green Technology:**

Mercury and UV free. RoHS compliant components. Polyester powder coat finish formulated without the use of VOC or toxic heavy metals.

### LED Characteristics

**LEDs:**

Long-life, high-efficiency surface mounting LEDs

**Color Stability:**

LED color temperature is warrantied to shift no more than 200K in CCT over a 5 year period.

**Color Uniformity:**

RAB's range of CCT (Correlated Color Temperature) follows the guidelines of the American National Standard for Specifications for the Chromaticity of Solid State Lighting (SSL) Products, ANSI C78.377-2015.

### Other

**5 Yr Limited Warranty:**

Fixture operation and paint finish are covered for a period of 5 years.



Copyright © 2014 RAB Lighting Inc. All Rights Reserved Note: Specifications are subject to change at any time without notice

## Technical Specifications (continued)

### Other

**Replacement:**

Replaces up to 400W Metal Halide.

**Country of Origin:**

Designed by RAB in New Jersey and assembled in the USA by RAB's IBEW Local 3 workers.

**Buy American Act Compliant:**

This product is a COTS item manufactured in the United States, and is compliant with the Buy American Act.

**Recovery Act (ARRA) Compliant:**

This product complies with the 52.225-21 "Required Use of American Iron, Steel, and Manufactured Goods-- Buy American Act-- Construction Materials (October 2010).

**GSA Schedule:**

Suitable in accordance with FAR Subpart 25.4.

## Dimensions

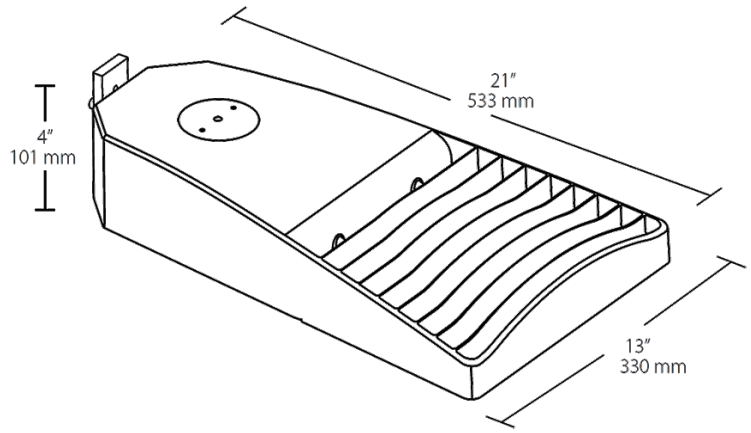


## Features

- Lightweight design and low EPA minimize pole load
- Best-in-class 5-G vibration rating
- 100,000-hour LED lifespan
- 5-year warranty

## Ordering Matrix

| Family | IES Type | Wattage | Color Temp | Finish | Driver Options | Mounting | Sensor Options | Accessories |
|---|---|---|---|---|---|---|---|---|
| LOT | 2T | 160 | N | | /480/D10 | | | /HS |
| | **2T** = Type II | **160** = 160W<br>**110** = 110W<br>**65** = 65W | **Blank** = 5000K (Cool)<br>**N** = 4000K (Neutral)<br>**Y** = 3000K (Warm) | **Blank** = Bronze<br>**W** = White | **/D10** = 120-277V, 0-10V Dimming (standard)<br>**/480/D10** = 480V, 0-10V Dimming | **Blank** = Mounts to RAB square poles<br>**/UPA** = Universal Pole Adaptor | **Blank** = None<br>**/PCT** = 120-277V Twistlock PC<br>**/PCT4** = 480V Twistlock PC<br>**/WS2** = Wattstopper Sensor + 20ft lens, 120-277V<br>**/WS4** = Wattstopper Sensor + 40ft lens, 120-277V<br>**/5PR** = 5-Pin Receptacle, no PCT<br>**/7PR** = 7-Pin Receptacle, no PCT<br>**/BL** = Bi-Level Dimming, 120-277V | **Blank** = None<br>**/HS** = 2 House-Side-Shields |


Copyright © 2014 RAB Lighting Inc. All Rights Reserved Note: Specifications are subject to change at any time without notice