PRT55W/480

This ultra high efficiency LED garage light delivers up to 118 lumens per Watt. Available in 30, 42 and 55 Watt versions that replace 70 to 175 Watt metal halide fixtures.

Color: White

Weight: 10.6 lbs

Project:	Type:
Prepared By:	Date:

Driver Info		LED Info	
Type:	Constant Current	Watts:	55W
120V:	N/A	Color Temp:	5000K (Cool)
208V:	N/A	Color Accuracy:	75 CRI
240V:	N/A	L70 Lifespan:	100,000
277V:	N/A	Lumens:	6,085
Input Watts:	59W	Efficacy:	103 LPW
Efficiency:	93%		

Technical Specifications

Listings

UL Listing:

Suitable for wet locations.

IESNA LM-79 & LM-80 Testing:

RAB LED luminaires have been tested by an independent laboratory in accordance with IESNA LM-79 and LM-80, and have received the Department of Energy "Lighting Facts" label.

Construction

Lens:

Frosted polycarbonate

Gaskets:

High temperature silicone.

IP Rating:

Ingress Protection rating of IP66 for dust and water.

Ambient Temperature:

Suitable for use in 40°C ambient temperatures.

Finish:

Our environmentally friendly polyester powder coatings are formulated for high-durability and long-lasting color, and contains no VOC or toxic heavy metals.

Cold Weather Starting:

Minimum starting temperature is -40°F/-40°C.

Thermal Management:

Superior thermal management with external Air-Flow fins.

Housing:

Die-cast aluminum and sheetmetal housing

Mounting:

Die-cast aluminum backbox with (4) 1/2" conduit openings with plugs. Hinged tether for easy installation and wiring. Also accomodates 1/2" or 3/4" NPS pendants (provided by others).

Lens:

High-transmission and vandal-resistant polycarbonate frosted lens

Reflector:

Specular polycarbonate

Green Technology:

Mercury and UV free, and RoHS compliant. Polyester powder coat finish formulated without the use of VOC or toxic heavy metals.

LED Characteristics

LEDs:

Long-life, high-efficiency surface mount LEDs

Lifespan:

100,000-hour LED lifespan based on IES LM-80 results and TM-21 calculations.

Color Consistency:

7-step MacAdam Ellipse binning to achieve consistent fixture-to-fixture color.

Color Stability:

LED color temperature is warrantied to shift no more than 200K in CCT over a 5 year period

Color Uniformity:

RAB's range of CCT (Correlated color temperature) follows the guidelines of the American National Standard for Specifications for the Chromaticity of Solid State Lighting (SSL) Products, ANSI C78.377-2008.

Other

California Title 24:

See PORTO with 0-10V dimming (/D10) driver for a compliant California Title 24.

Warranty:

RAB warrants that our LED products will be free from defects in materials and workmanship for a period of five (5) years from the date of delivery to the end user, including coverage of light output, color stability, driver performance and fixture finish.

Country of Origin:

Designed by RAB in New Jersey and assembled in the USA by RAB's IBEW Local 3 workers.

Buy American Act Compliant:

This product is a COTS item manufactured in the United States, and is compliant with the Buy American Act.

Recovery Act (ARRA) Compliant:

This product complies with the 52.225-21 "Required Use of American Iron, Steel, and Manufactured Goods-- Buy American Act-- Construction Materials (October 2010).

Trade Agreements Act Compliant:

This product is a COTS item manufactured in the United States, and is compliant with the Trade Agreements Act.

GSA Schedule:

Suitable in accordance with FAR Subpart 25.4.

Copyright © 2014 RAB Lighting Inc. All Rights Reserved Note: Specifications are subject to change at any time without notice

PRT55W/480

Dimensions

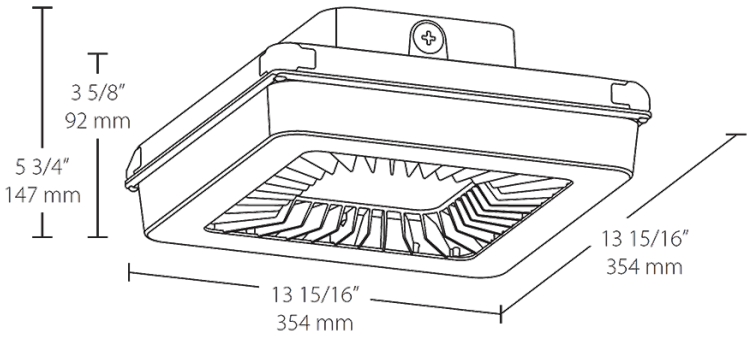

Features

- Ultra-high efficiency
- Pendant or surface mount
- IP 66 rated, keeps water and dust out
- Low glare, vandal-resistant polycarbonate lens
- 20% uplight eliminates "cave effect"
- 100,000-Hour LED lifespan
- 5-year warranty

Ordering Matrix

Family	Watts	Color Temp	Finish	Dimming	Voltage
PRT					
	30 = 30W **42** = 42W **55** = 55W	**Blank** = Cool **Y** = Warm **N** = Neutral	**Blank** = Bronze **W** = White	**Blank** = No Dimming **/D10** = Dimmable	**Blank** = 120-277V **/480** = 480V

Copyright © 2014 RAB Lighting Inc. All Rights Reserved Note: Specifications are subject to change at any time without notice