RDLED2S8-30YN-TW

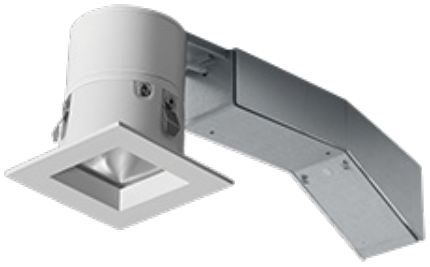

Clean, unobtrusive design delivers smooth and abundant light from an aperture just over 1 inch wide. Available in flush trim for a trimless look without the mess left behind from ceiling finishing work.

Color: White trim

Weight: 1.5 lbs

Project:	Type:
Prepared By:	**Date:**

Driver Info

Type:	Constant Current
120V:	0.08A
208V:	N/A
240V:	N/A
277V:	N/A
Input Watts:	9W
Efficiency:	91%

LED Info

Watts:	8W
Color Temp:	3500K
Color Accuracy:	82 CRI
L70 Lifespan:	N/A
Lumens:	684
Efficacy:	78 LPW

Copyright © 2014 RAB Lighting Inc. All Rights Reserved Note: Specifications are subject to change at any time without notice

Technical Specifications

Listings

UL Listing:

Suitable for wet locations in a covered ceiling

IESNA LM79 & LM-80 Testing:

RAB LED luminaries have been tested by an independent laboratory in accordance with IESNA LM-79 and LM-80, and have received the Department of Energy "Lighting Facts" label.

Other

ENERGY STAR:

This product is ENERGY STAR® qualified.

Trim Component:

This component can be ordered with New Construction housing in order to make a complete fixture.

Equivalency:

RDLED 8W is equivalent to 50W MR16

California Title 24:

RDLED2S8 complies with 2013 California Title 24 building and electrical codes as a commercial indoor fixture for general spaces when used with a vacancy sensor and TRIAC dimming control. Select a vacancy sensor using catalog number LVS800. TRIAC dimmer provided by others.

Warranty:

RAB warrants that our LED products will be free from defects in materials and workmanship for a period of ten (5) years from the date of delivery to the end user, including coverage of light output, color stability, driver performance and fixture finish.

Country of Origin:

Designed by RAB in New Jersey and assembled in the USA by RAB's IBEW Local 3 workers.

Buy American Act Compliant:

This product is a COTS item manufactured in the United States, and is compliant with the Buy American Act.

Recovery Act (ARRA) Compliant:

This product complies with the 52.225-21 "Required Use of American Iron, Steel, and Manufactured Goods-- Buy American Act-- Construction Materials (October 2010)

Trade Agreements Act Compliant:

This product is a COTS item manufactured in the United States, and is compliant with the Trade Agreements Act.

GSA Schedule:

Suitable in accordance with FAR Subpart 25.4

Construction

IC Rating:

Suitable for direct contact with insulation

Ambient Temperature:

Suitable for use in 55°C ambient temperatures

Cold Weather Starting:

The minimum starting temperature is -40°F/-40°C

Lens:

Nanostructure lens eliminates "hot spots", and helps provide smooth, uniform light and higher efficiency

Junction Box:

Integral junction box with wiring capacity for
Min 60°C supply conductors
End of Run

Housing:

Specification-grade, die-cast aluminum construction

Installation:

Torsion springs easily install into ceiling collar (remodeler) or rough-in (new construction)

Trim Ring:

White powder coated die cast 1/2" trim ring.

Green Technology:

Mercury and UV free, and RoHS compliant

Finish:

Our environmentally friendly polyester powder coatings are formulated for high-durability and long-lasting color, and contain no VOC or toxic heavy metals.

LED Characteristics

LED:

High-output, long-life LED with 2-step binning and integrated driver technology

Color Consistency:

2-step MacAdam Ellipse binning to achieve consistent fixture-to-fixture color

Color Stability:

LED color temperature is warrantied to shift no more than 200K in CCT over a 5 year period

Electrical

Driver:

Constant Current, Class 2, 120VAC Only, 50/60Hz, 200mA, 0.07A

Technical Specifications (continued)

Electrical

Dimming Driver:

TRIAC compatible dimmer as low as 10%.

Optical

Optics:

30° beam spread with specular thermoplastic optics

Spacing Criteria:

0-180° (along): 0.50
90-270° (across): 0.50
diagonal: 0.52

Copyright © 2014 RAB Lighting Inc. All Rights Reserved Note: Specifications are subject to change at any time without notice

RDLED2S8-30YN-TW

Dimensions

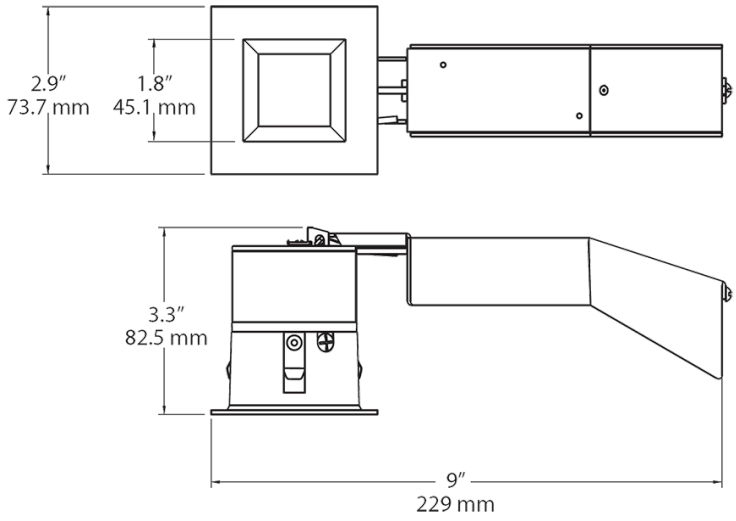

Features

- 8W replaces 50W MR16 with energy savings of 82%
- TRIAC dimmer compatibility for additional light control
- Precision-engineered optics deliver smooth light without hot spots or glare

Ordering Matrix

Family	Size	Shape	Watts	Beam Spread	Color Temp	Type	Finish
RDLED							
	2 = 2"	**S** = Square	**8** = 8W	**20** = 20° **30** = 30° **40** = 40° **W** = Wall Washer	**YY** = 2700K (Residential Warm) **Y** = 3000K (Warm) **YN** = 3500K (Warm Neutral)	**T** = 1/2" Trim **TL** = Trimless Look	**W** = White Trim

Copyright © 2014 RAB Lighting Inc. All Rights Reserved Note: Specifications are subject to change at any time without notice