# RDLED6S26L-WYY-M-S

Remodeler Square 4" & 6" Silver Trim with Matte Silver Cone downlights provide an ultra performance, high-end solution for adding recessed lighting to existing ceilings. 90 CRI.

Color: Matte silver cone silver trim  Weight: 3.5 lbs

| Project: | Type: |
|---|---|
| Prepared By: | Date: |

| Driver Info | | LED Info | |
|---|---|---|---|
| Type: | Constant Current | Watts: | 26W |
| 120V: | 0.253A | Color Temp: | 2700K |
| 208V: | 0.168A | Color Accuracy: | 90 CRI |
| 240V: | 0.146A | L70 Lifespan: | 100,000 |
| 277V: | 0.126A | Lumens: | 1,442 |
| Input Watts: | 30W | Efficacy: | 48 LPW |
| Efficiency: | 87% | | |

## Technical Specifications

### Listings

**UL Listed:**

Suitable for wet locations covered ceiling.

### Optical

**Photometrics:**

Photometrics are based on prorated reports. Contact the RAB Lighting Design department for the most up-to-date data.

**Optics:**

Wall wash optics engineered for wide lateral distribution and smooth soft light from ceiling to floor.

**Spacing Criteria:**

0-180° (along): 1.44
90-270° (across): 1.10
diagonal: 1.16.

### Electrical

**Driver:**

Provided with Lutron L3DA4U1UKS-HC070 driver, Constant Current, Class 2, 120-277V, 50/60Hz,700mA, 0.7A, Power Factor 90%, THD ≤ 20% Minimum Operating Temp 32° F (0° C).

**Dimming Driver:**

Lutron Hi-Lume Dimming Driver. See compatibility guide

### LED Characteristics

**LED:**

Long-life, high-output LED module. Binned for natural white light to match incandescent and 3-step MacAdam Ellipse consistency.

**Lifespan:**

100,000-hour LED lifespan based on IES LM-80 results and TM-21 calculations.

**Correlated Color Temp. (Nominal CCT):**

2700K Residential Warm.

**Color Consistency:**

3-step MacAdam Ellipse binning to achieve consistent fixture-to-fixture color.

**Color Stability:**

LED color temperature is warrantied to shift no more than 200K in CCT over a 5 year period.

### Construction

**Ambient Temperature:**

Suitable for use in 40°C ambient temperatures.

**Cold Weather Starting:**

The minimum starting temperature is -40°F/-40°C.

**Pivot Swivel:**

Patent-pending pivot swivel for wall washer model maneuvers around joists and enables off-axis lighting.

**Trim Ring:**

Silver powder coated die cast trim ring.

**Trim Cone:**

Matte silver square trim cone.

**Lens:**

Nanostructure lens eliminates "hot spots", and helps provide smooth, uniform light and higher efficiency.

**Junction Box:**

Integral junction box with wiring capacity for
Min 90°C supply conductors
2 in 2 out

**Housing:**

Professional-grade, die-cast aluminum construction.

**Easy Installation:**

Easy installation with ceiling clamps.

**Green Technology:**

Mercury and UV free.

### Other

**Equivalency:**

Wall washers can be used to replace eyeball trims. 26W is equivalent to 100W PAR.

**Air Tight:**

Housing certified Air Tight as per ASTM E283

**Absolute White™:**

A unique binning process designed to match incandescent at each color temperature. It's 3-step consistent, very stable over time and looks the way you expect light to look.

**Patents:**

Wall Washer Optics and Pivot Swivel is protected by patents pending in US, Canada, China, Taiwan and Mexico.

**California Title 24:**

RDLED6S26L complies with 2013 California Title 24 building and electrical codes as a residential indoor fixture. It also complies as a commercial indoor fixture for general spaces when used with a vacancy sensor and Lutron dimming control. Select a vacancy sensor using catalog number LVS800. Lutron dimmer provided by others.


Copyright © 2014 RAB Lighting Inc. All Rights Reserved  Note: Specifications are subject to change at any time without notice

## Technical Specifications (continued)

### Other

**Warranty:**

RAB warrants that our LED products will be free from defects in materials and workmanship for a period of five (5) years from the date of delivery to the end user, including coverage of light output, color stability, driver performance and fixture finish.

**Country of Origin:**

Designed by RAB in New Jersey and assembled in the USA by RAB's IBEW Local 3 workers.

**Buy American Act Compliant:**

This product is a COTS item manufactured in the United States, and is compliant with the Buy American Act.

**Recovery Act (ARRA) Compliant:**

This product complies with the 52.225-21 "Required Use of American Iron, Steel, and Manufactured Goods-- Buy American Act-- Construction Materials (October 2010).

**Trade Agreements Act Compliant:**

This product is a COTS item manufactured in the United States, and is compliant with the Trade Agreements Act.

**GSA Schedule:**

Suitable in accordance with FAR Subpart 25.4.

### Dimensions

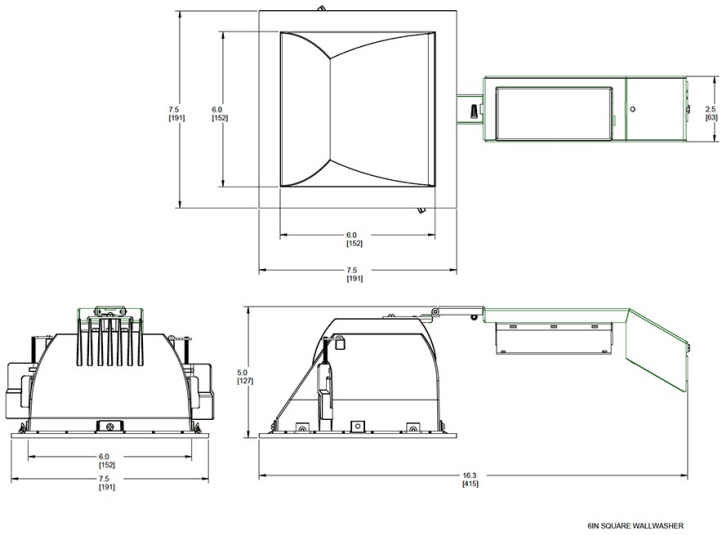


### Features

- High performance, high efficiency alternative to incandescent lighting
- Integrated ceiling clamps make installation fast and secure for ceiling up to 1 1/4" thick
- Nanostructure lens eliminates "hot spots" providing smooth and efficient light
- Low-profile design allows for installation in ceilings with limited space
- Absolute White™ natural light output
- 90 CRI

### Ordering Matrix

| Family | Size | Shape | Watts | Dimming Driver | Beam Spread | Color Temp | Cone Color | Trim Color |
|---|---|---|---|---|---|---|---|---|
| RDLED | | | | | | | | |
| | **6** = 6"<br>**4** = 4" | **S** = Square | **12** = 12W (4" only)<br>**20** = 20W<br>**26** = 26W (6" only) | = Triac Driver<br>**E** = ELV Driver<br>**L** = Lutron Driver<br>**F** = 120V-277V Driver | **50** = 50°<br>**80** = 80°<br>**W** = Wall Washer | **YY** = 2700K (Residential Warm)<br>**Y** = 3000K (Warm)<br>**YN** = 3500K (Warm Neutral) | **M** = Matte Silver | **S** = Specular Silver |


Copyright © 2014 RAB Lighting Inc. All Rights Reserved Note: Specifications are subject to change at any time without notice