RDLED6S20-WYN-B-W

Remodeler Square 4" & 6" White Trim with Black Cone downlights provide an ultra performance, high-end solution for adding recessed lighting to existing ceilings. 90 CRI.

Color: Black cone white trim

Weight: 3.5 lbs

Project:	Type:
Prepared By:	Date:

Driver Info		LED Info	
Type:	Constant Current	Watts:	20W
120V:	0.18A	Color Temp:	3500K
208V:	0.11A	Color Accuracy:	90 CRI
240V:	0.10A	L70 Lifespan:	100,000
277V:	0.09A	Lumens:	1,099
Input Watts:	21W	Efficacy:	51 LPW
Efficiency:	93%		

Technical Specifications

Listings

UL Listed:

Suitable for wet locations covered ceiling.

Optical

Photometrics:

Photometrics are based on prorated reports. Contact the RAB Lighting Design department for the most up-to-date data.

Optics:

Wall wash optics engineered for wide lateral distribution and smooth soft light from ceiling to floor.

Electrical

Driver:

TRIAC, Constant Current, Class 2, 120V, 50/60Hz, 500mA, 0.15A, Power Factor 99.6%, THD ≤ 10%.

Dimming Driver:

TRIAC compatible dimmer as low as 10%.

LED Characteristics

LED:

Long-life, high-output LED module. Binned for natural white light to match incandescent and 3-step MacAdam Ellipse consistency.

Lifespan:

100,000-hour LED lifespan based on IES LM-80 results and TM-21 calculations.

Correlated Color Temp. (Nominal CCT):

3500 Warm/Neutral.

Color Consistency:

3-step MacAdam Ellipse binning to achieve consistent fixture-to-fixture color.

Color Stability:

LED color temperature is warrantied to shift no more than 200K in CCT over a 5 year period.

Construction

Ambient Temperature:

Suitable for use in 40°C ambient temperatures.

Cold Weather Starting:

The minimum starting temperature is -40°F/-40°C.

Pivot Swivel:

Patent-pending pivot swivel for wall washer model maneuvers around joists and enables off-axis lighting.

Trim Ring:

White powder coated die cast trim ring.

Trim Cone:

Black square trim cone.

Lens:

Nanostructure lens eliminates "hot spots", and helps provide smooth, uniform light and higher efficiency.

Junction Box:

Integral junction box with wiring capacity for
Min 90°C supply conductors
2 in 2 out

Housing:

Professional-grade, die-cast aluminum construction.

Easy Installation:

Easy installation with ceiling clamps.

Green Technology:

Mercury and UV free.

Other

Equivalency:

Wall washers can be used to replace eyeball trims. 20W is equivalent to 100W PAR.

Air Tight:

Housing certified Air Tight as per ASTM E283

Absolute White™:

A unique binning process designed to match incandescent at each color temperature. It's 3-step consistent, very stable over time and looks the way you expect light to look.

Patents:

Wall Washer Optics and Pivot Swivel is protected by patents pending in US, Canada, China, Taiwan and Mexico.

California Title 24:

RDLED6S20 complies with 2013 California Title 24 building and electrical codes as a residential indoor fixture. It also complies as a commercial indoor fixture for general spaces when used with a vacancy sensor and TRIAC dimming control. Select a vacancy sensor using catalog number LVS800. TRIAC dimmer provided by others.

Warranty:

RAB warrants that our LED products will be free from defects in materials and workmanship for a period of five (5) years from the date of delivery to the end user, including coverage of light output, color stability, driver performance and fixture finish.

Copyright © 2014 RAB Lighting Inc. All Rights Reserved Note: Specifications are subject to change at any time without notice

Technical Specifications (continued)

Other

Country of Origin:

Designed by RAB in New Jersey and assembled in the USA by RAB's IBEW Local 3 workers.

Buy American Act Compliant:

This product is a COTS item manufactured in the United States, and is compliant with the Buy American Act.

Recovery Act (ARRA) Compliant:

This product complies with the 52.225-21 "Required Use of American Iron, Steel, and Manufactured Goods-- Buy American Act-- Construction Materials (October 2010).

Trade Agreements Act Compliant:

This product is a COTS item manufactured in the United States, and is compliant with the Trade Agreements Act.

GSA Schedule:

Suitable in accordance with FAR Subpart 25.4.

Dimensions

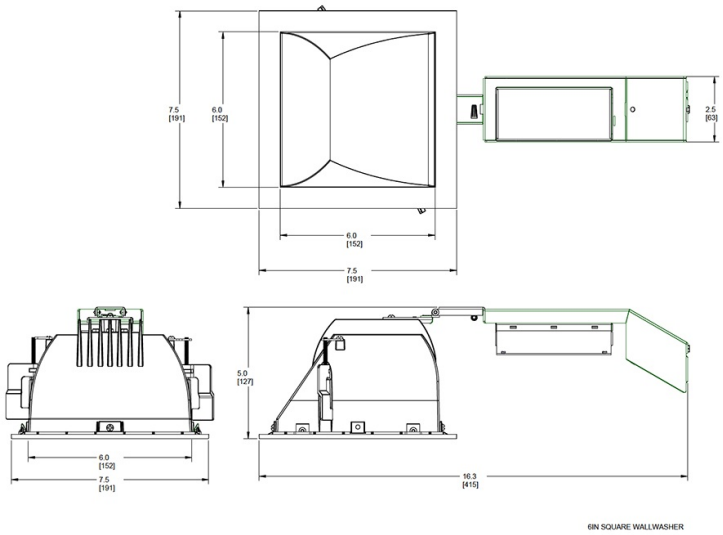

Features

High performance, high efficiency alternative to incandescent lighting

Integrated ceiling clamps make installation fast and secure for ceiling up to 1 1/4" thick

Nanostructure lens eliminates "hot spots" providing smooth and efficient light

Low-profile design allows for installation in ceilings with limited space

Absolute White™ natural light output

90 CRI

Ordering Matrix

Family	Size	Shape	Watts	Dimming Driver	Beam Spread	Color Temp	Cone Color	Trim Color
RDLED								
	6 = 6" **4** = 4"	**S** = Square	**12** = 12W (4" only) **20** = 20W **26** = 26W (6" only)	= Triac Driver **E** = ELV Driver **L** = Lutron Driver **F** = 120V-277V Driver	**50** = 50° **80** = 80° **W** = Wall Washer	**YY** = 2700K (Residential Warm) **Y** = 3000K (Warm) **YN** = 3500K (Warm Neutral)	**B** = Black	**W** = White

Copyright © 2014 RAB Lighting Inc. All Rights Reserved Note: Specifications are subject to change at any time without notice