RDLED4S12F-WYY-W-B

Remodeler Square 4" & 6" Black Trim with White Cone downlights provide an ultra performance, high-end solution for adding recessed lighting to existing ceilings. 90 CRI.

Color: White cone black trim

Weight: 2.5 lbs

Project:	Type:
Prepared By:	Date:

Driver Info		LED Info	
Type:	Constant Current	Watts:	12W
120V:	0.123A	Color Temp:	2700K
208V:	0.08A	Color Accuracy:	90 CRI
240V:	0.07A	L70 Lifespan:	100,000
277V:	0.06A	Lumens:	747
Input Watts:	14W	Efficacy:	53 LPW
Efficiency:	85%		

Technical Specifications

Listings

UL Listed:

Suitable for wet locations covered ceiling.

Optical

Photometrics:

Photometrics are based on prorated reports. Contact the RAB Lighting Design department for the most up-to-date data.

Optics:

Wall wash optics engineered for wide lateral distribution and smooth soft light from ceiling to floor.

Electrical

Driver:

On/Off Non-Dimming, Constant Current, Class 2, 100-277V, 50/60Hz,4KV Surge Protection, 350mA, 100-240VAC 0.3-0.15A, 277VAC 0.15A, Power Factor 99%, THD ≤ 20%.

LED Characteristics

LED:

Long-life, high-output LED module. Binned for natural white light to match incandescent and 3-step MacAdam Ellipse consistency.

Lifespan:

100,000-hour LED lifespan based on IES LM-80 results and TM-21 calculations.

Correlated Color Temp. (Nominal CCT):

2700K Residential Warm.

Color Consistency:

3-step MacAdam Ellipse binning to achieve consistent fixture-to-fixture color.

Color Stability:

LED color temperature is warrantied to shift no more than 200K in CCT over a 5 year period.

Construction

Ambient Temperature:

Suitable for use in 40°C ambient temperatures.

Cold Weather Starting:

The minimum starting temperature is -40°F/-40°C.

Pivot Swivel:

Patent-pending pivot swivel for wall washer model maneuvers around joists and enables off-axis lighting.

Trim Ring:

Black powder coated die cast trim ring.

Trim Cone:

White square trim cone.

Lens:

Nanostructure lens eliminates "hot spots", and helps provide smooth, uniform light and higher efficiency.

Junction Box:

Integral junction box with wiring capacity for
Min 90°C supply conductors
2 in 2 out

Housing:

Professional-grade, die-cast aluminum construction.

Easy Installation:

Easy installation with ceiling clamps.

Green Technology:

Mercury and UV free.

Other

Equivalency:

Wall washers can be used to replace eyeball trims. 12W is equivalent to 75W R30.

Absolute White™:

A unique binning process designed to match incandescent at each color temperature. It's 3-step consistent, very stable over time and looks the way you expect light to look.

Patents:

Wall Washer Optics and Pivot Swivel is protected by patents pending in US, Canada, China, Taiwan and Mexico.

California Title 24:

RDLED4S12 complies with 2013 California Title 24 building and electrical codes as a residential indoor fixture. See RDLED models with dimming drivers for products that comply as commercial indoor fixtures for general spaces. Any additional component requirements will be listed in the Title 24 section under technical specifications on the product page.

Warranty:

RAB warrants that our LED products will be free from defects in materials and workmanship for a period of five (5) years from the date of delivery to the end user, including coverage of light output, color stability, driver performance and fixture finish.

Country of Origin:

Designed by RAB in New Jersey and assembled in the USA by RAB's IBEW Local 3 workers.

Buy American Act Compliant:

This product is a COTS item manufactured in the United States, and is compliant with the Buy American Act.

Copyright © 2014 RAB Lighting Inc. All Rights Reserved Note: Specifications are subject to change at any time without notice

Technical Specifications (continued)

Other

Recovery Act (ARRA) Compliant:

This product complies with the 52.225-21 "Required Use of American Iron, Steel, and Manufactured Goods-- Buy American Act-- Construction Materials (October 2010).

Trade Agreements Act Compliant:

This product is a COTS item manufactured in the United States, and is compliant with the Trade Agreements Act.

GSA Schedule:

Suitable in accordance with FAR Subpart 25.4.

Dimensions

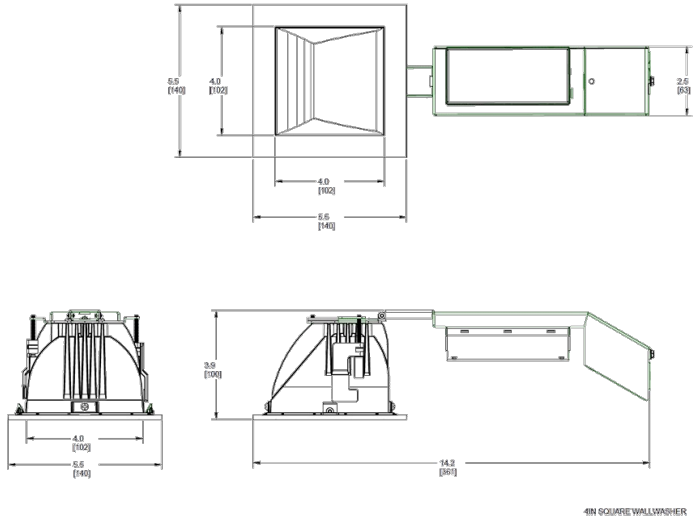

Features

- High performance, high efficiency alternative to incandescent lighting
- Integrated ceiling clamps make installation fast and secure for ceiling up to 1 1/4" thick
- Nanostructure lens eliminates "hot spots" providing smooth and efficient light
- Low-profile design allows for installation in ceilings with limited space
- Absolute White™ natural light output
- 90 CRI

Ordering Matrix

Family	Size	Shape	Watts	Dimming Driver	Beam Spread	Color Temp	Cone Color	Trim Color
RDLED								
	6 = 6" **4** = 4"	**S** = Square	**12** = 12W (4" only) **20** = 20W **26** = 26W (6" only)	= Triac Driver **E** = ELV Driver **L** = Lutron Driver **F** = 120V-277V Driver	**50** = 50° **80** = 80° **W** = Wall Washer	**YY** = 2700K (Residential Warm) **Y** = 3000K (Warm) **YN** = 3500K (Warm Neutral)	**S** = White	**B** = Black

Copyright © 2014 RAB Lighting Inc. All Rights Reserved Note: Specifications are subject to change at any time without notice