RDLED4S12F-50YN-M-W

Remodeler Square 4" & 6" White Trim with Matte Silver Cone downlights provide an ultra performance, high-end solution for adding recessed lighting to existing ceilings. 90 CRI.

Color: Matte silver cone white trim

Weight: 2.5 lbs

Project:	Type:
Prepared By:	Date:

Driver Info		LED Info	
Type:	Constant Current	Watts:	12W
120V:	0.123A	Color Temp:	3500K
208V:	0.08A	Color Accuracy:	90 CRI
240V:	0.07A	L70 Lifespan:	100,000
277V:	0.06A	Lumens:	850
Input Watts:	14W	Efficacy:	60 LPW
Efficiency:	85%		

Technical Specifications

Listings

UL Listed:

Suitable for wet locations covered ceiling.

Optical

Photometrics:

Photometrics are based on prorated reports. Contact the RAB Lighting Design department for the most up-to-date data.

Optics:

50° beam spread with specular thermoplasic optics and Nanostructure lens technology for smooth light output and high efficiency.

Spacing Criteria:

0-180° (along): 0.96
90-270° (across): 0.96
diagonal: 1.02

Electrical

Driver:

On/Off Non-Dimming, Constant Current, Class 2, 100-277V, 50/60Hz,4KV Surge Protection, 350mA, 100-240VAC 0.3-0.15A, 277VAC 0.15A, Power Factor 99%, THD ≤ 20%.

LED Characteristics

LED:

Long-life, high-output LED module. Binned for natural white light to match incandescent and 3-step MacAdam Ellipse consistency.

Lifespan:

100,000-hour LED lifespan based on IES LM-80 results and TM-21 calculations.

Correlated Color Temp. (Nominal CCT):

3500 Warm/Neutral.

Color Consistency:

3-step MacAdam Ellipse binning to achieve consistent fixture-to-fixture color.

Color Stability:

LED color temperature is warrantied to shift no more than 200K in CCT over a 5 year period.

Construction

Ambient Temperature:

Suitable for use in 40°C ambient temperatures.

Cold Weather Starting:

The minimum starting temperature is -40°F/-40°C.

Trim Ring:

White powder coated die cast trim ring.

Trim Cone:

Matte silver square trim cone.

Lens:

Nanostructure lens eliminates "hot spots", and helps provide smooth, uniform light and higher efficiency.

Junction Box:

Integral junction box with wiring capacity for
Min 90°C supply conductors
2 in 2 out

Housing:

Professional-grade, die-cast aluminum construction.

Easy Installation:

Easy installation with ceiling clamps.

Green Technology:

Mercury and UV free.

Other

Equivalency:

RDLED 12W is equivalent to 75W R30.

Absolute White™:

A unique binning process designed to match incandescent at each color temperature. It's 3-step consistent, very stable over time and looks the way you expect light to look.

California Title 24:

RDLED4S12 complies with 2013 California Title 24 building and electrical codes as a residential indoor fixture. See RDLED models with dimming drivers for products that comply as commercial indoor fixtures for general spaces. Any additional component requirements will be listed in the Title 24 section under technical specifications on the product page.

Warranty:

RAB warrants that our LED products will be free from defects in materials and workmanship for a period of five (5) years from the date of delivery to the end user, including coverage of light output, color stability, driver performance and fixture finish.

Country of Origin:

Designed by RAB in New Jersey and assembled in the USA by RAB's IBEW Local 3 workers.

Buy American Act Compliant:

This product is a COTS item manufactured in the United States, and is compliant with the Buy American Act.

Recovery Act (ARRA) Compliant:

This product complies with the 52.225-21 "Required Use of American Iron, Steel, and Manufactured Goods-- Buy American Act-- Construction Materials (October 2010).

Copyright © 2014 RAB Lighting Inc. All Rights Reserved Note: Specifications are subject to change at any time without notice

Technical Specifications (continued)

Other

Trade Agreements Act Compliant:

This product is a COTS item manufactured in the United States, and is compliant with the Trade Agreements Act.

GSA Schedule:

Suitable in accordance with FAR Subpart 25.4.

Dimensions

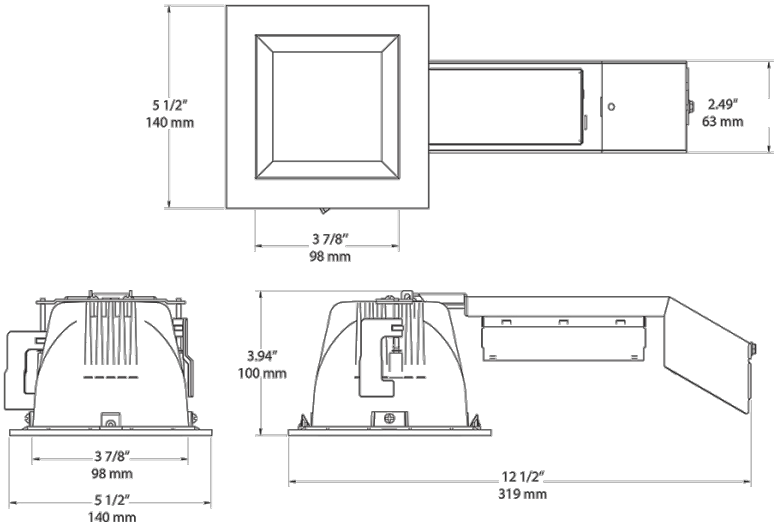

Features

High performance, high efficiency alternative to incandescent lighting

Integrated ceiling clamps make installation fast and secure for ceiling up to 1 1/4" thick

Nanostructure lens eliminates "hot spots" providing smooth and efficient light

Low-profile design allows for installation in ceilings with limited space

Absolute White™ natural light output

90 CRI

Ordering Matrix

Family	Size	Shape	Watts	Dimming Driver	Beam Spread	Color Temp	Cone Color	Trim Color
RDLED								
	6 = 6" **4** = 4"	**S** = Square	**12** = 12W (4" only) **20** = 20W **26** = 26W (6" only)	= Triac Driver **E** = ELV Driver **L** = Lutron Driver **F** = 120V-277V Driver	**50** = 50° **80** = 80° **W** = Wall Washer	**YY** = 2700K (Residential Warm) **Y** = 3000K (Warm) **YN** = 3500K (Warm Neutral)	**M** = Matte Silver	**W** = White

Copyright © 2014 RAB Lighting Inc. All Rights Reserved Note: Specifications are subject to change at any time without notice