ND6S20E/E2

Easy to install 4" and 6" rough-in with die-cast aperture ring, removable driver, thermal protector and adjustable butterfly brackets. This rough-in is designed to make new construction recessed downlighting easy 90 CRI.

Color: N/A

Weight: 8.0 lbs

Project:	Type:
Prepared By:	Date:

Driver Info

Type:	Constant Current
120V:	0.17A
208V:	0.11A
240V:	0.10A
277V:	0.09A
Input Watts:	0W
Efficiency:	N/A

LED Info

Watts:	20W
Color Temp:	Sold Separately
Color Accuracy:	90 CRI
L70 Lifespan:	N/A
Lumens:	N/A
Efficacy:	N/A

Technical Specifications

Listings

UL Listed:

Suitable for wet locations covered ceiling.

Optical

Photometrics:

Photometrics are based on prorated reports. Contact the RAB Lighting Design department for the most up-to-date data.

Construction

Housing Component:

This component must be ordered with New Construction Square Trim Module in order to make a complete fixture.

Ambient Temperature:

Suitable for use in 40°C ambient temperatures.

Cold Weather Starting:

The minimum starting temperature is -40°F/-40°C.

Aperture Size:

6" Rough-In.

Drop Ceiling Installation:

NDLED can be installed in drop ceiling tiles when using optional c-channel bars and following local construction codes.

Junction Box:

Integral junction box with wiring capacity for
Min 90°C supply conductors
4 in 4 out

Butterfly Brackets:

The Butterfly bracket allows to mount with the following 1/4 x 1/2" bar stock, C Channel, 1/2" conduit, or nailer bars.

Easy Installation:

The EZConnector makes installation easy.

Thermal Protector:

Thermal protector included. Disables power if temperature exceeds safe operation levels.

Electrical

Emergency Battery Backup:

Battery backup will operate the LED Lamp for 90 minutes if power fails. Wired for 120V-277V.

Driver:

Electronic Low Voltage, Constant Current, Class 2, 120-277V, 50/60Hz, 350mA, 120V 0.17A 277V 0.09A, Power Factor 99.4%, THD ≤ 10%.

Dimming Driver:

Electronic Low Voltage compatible dimmer with dimming as low as 2%.

Other

Equivalency:

DLED 26W is equivalent to 100W PAR.

Air Tight:

Housing certified Air Tight as per ASTM E283

California Title 24:

ND6S20E complies with 2013 California Title 24 building and electrical codes as a residential indoor fixture. It also complies as a commercial indoor fixture for general spaces when used with a vacancy sensor and ELV dimming control. Select a vacancy sensor using catalog number LVS800. ELV dimmer provided by others.

Warranty:

RAB warrants that our LED products will be free from defects in materials and workmanship for a period of five (5) years from the date of delivery to the end user, including coverage of light output, color stability, driver performance and fixture finish.

Country of Origin:

Designed by RAB in New Jersey and assembled in the USA by RAB's IBEW Local 3 workers.

Buy American Act Compliant:

This product is a COTS item manufactured in the United States, and is compliant with the Buy American Act.

Recovery Act (ARRA) Compliant:

This product complies with the 52.225-21 "Required Use of American Iron, Steel, and Manufactured Goods-- Buy American Act-- Construction Materials (October 2010).

Trade Agreements Act Compliant:

This product is a COTS item manufactured in the United States, and is compliant with the Trade Agreements Act.

GSA Schedule:

Suitable in accordance with FAR Subpart 25.4.

LED Characteristics

Color Accuracy:

90 CRI

Copyright © 2014 RAB Lighting Inc. All Rights Reserved Note: Specifications are subject to change at any time without notice

ND6S20E/E2

Dimensions

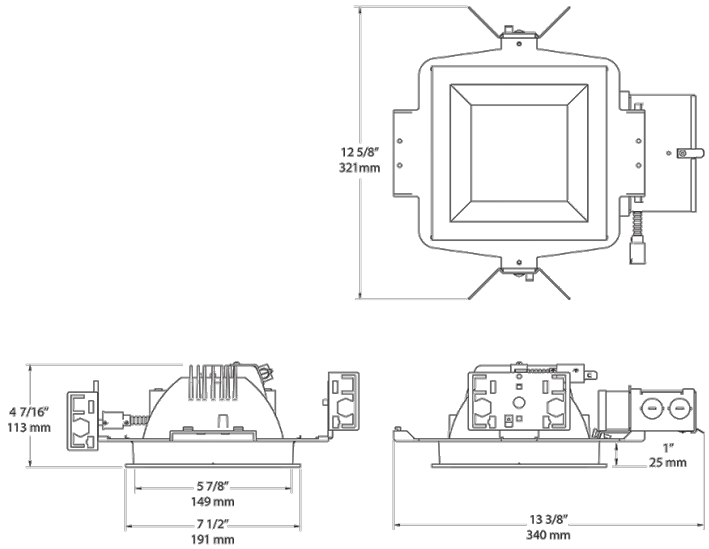

Features

Butterfly bracket allows mounting with bar stock, "C" channel, 1/2" conduit or nailer bars

Low-profile design allows for installation in ceilings with limited space

Sturdy design with die cast aperture frame

90 CRI

Ordering Matrix

Family	Type	Size	Shape	Watts	Dimming Driver	Battery Backup
ND	^	6	S	20	E	/E2
	Blank = Standard **IC** = Insulation Contact (IC)	**4** = 4" **6** = 6"	**S** = Square	**12** = 12W **20** = 20W **26** = 26W	**Blank** = Triac Driver **E** = ELV Driver **L** = Lutron Driver **F** = 120V-277V Driver	**Blank** = No Battery Backup **/E2** = 120-277V Backup

Copyright © 2014 RAB Lighting Inc. All Rights Reserved Note: Specifications are subject to change at any time without notice