RAIL95YNW/D10

LED High Bay fixture ideal for large indoor spaces, including warehouses, gymnasiums and distribution centers that require mounting heights from 15 to 50 feet. Available in 95, 150, 185 and 225 Watt versions with equivalencies from 200 to 400 Watt metal halide fixtures.

Color: White

Weight: 18.4 lbs

Project:	Type:
Prepared By:	Date:

Driver Info		LED Info	
Type:	Constant Current	Watts:	95W
120V:	0.78A	Color Temp:	3500K
208V:	0.47A	Color Accuracy:	82 CRI
240V:	0.41A	L70 Lifespan:	100,000
277V:	0.35A	Lumens:	10,053
Input Watts:	92W	Efficacy:	110 LPW
Efficiency:	N/A		

Technical Specifications

Listings

UL Listing:

Suitable for damp locations

IESNA LM-79 & LM-80 Testing:

RAB LED luminaires have been tested by an independent laboratory in accordance with IESNA LM-79 and LM-80, and have received the Department of Energy 'Lighting Facts" label.

DLC Listed:

This product is on the Design Lights Consortium (DLC) Qualified Products List and is eligible for rebates from DLC Member Utilities.
DLC Product Code: PQJSF6PF

LED Characteristics

Lifespan:

100,000-hour LED lifespan based on IES LM-80 results and TM-21 calculations.

LEDs:

Long-life, high-efficiency surface mount LEDs

Color Stability:

LED Color temperature is warrantied to shift no more than 200K in CCT over a 5 year period.

Color Uniformity:

RAB's range of CCT (Correlated color temperature) follows the guidelines of the American National Standard for Specifications for the Chromaticity of Solid State Lighting (SSL) Products, ANSI C78.377-2015.

Electrical

Driver:

One Driver, Class 2, Constant Current, 100-277VAC, 50-60Hz, 4kV, 1.1A,

THD:

4.7% at 120V, 11.0% at 277V

Power Factor:

99.6% at 120V, 95.1% at 277V

Construction

Ambient Temperature:

Suitable for use 12 hours a day, 5 days a week in 50°C. Suitable for 24/7 use in ambient temperatures up to 30°C. For questions related to fixture operation in high ambient temperatures, contact RAB tech support at 888-722-1000.

Housing:

Extruded aluminum

Lens:

High-transmittance polystyrene

Reflector:

Specular, high-reflectance aluminum with 95% reflectivity

Mounting:

V hooks (chain by others)

Gaskets:

High temperature silicone gaskets.

Finish:

Our environmentally friendly polyester powder coatings are formulated for high-durability and long-lasting color, and contains no VOC or toxic heavy metals.

Green Technology:

Mercury and UV free, and RoHS compliant. Polyester powder coat finish formulated without the use of VOC or toxic heavy metals.

Recommended Mounting Height:

Up to 25 ft.

Other

Equivalency:

RAIL High Bay 95W LED is equivalent to 250W metal halide fixtures at 25' mounting height. RAIL High Bay 95W LED replacement is 400W metal halide fixtures replacement at 35' mounting height, low activity warehouse.

LED RAIL High Bay with Dimmable Driver:

Driver includes dimming control for 0-10V dimming systems. Requires separate 0-10V DC dimming circuit. Dims as low as 10%.

Warranty:

RAB warrants that our LED products will be free from defects in materials and workmanship for a period of five (5) years from the date of delivery to the end user, including coverage of light output, color stability, driver performance and fixture finish.

California Title 24:

See RAIL with Multi-Level sensor (/WS2 or /WS4) for a compliant California Title 24.

Country of Origin:

Designed by RAB in New Jersey and assembled in the USA by RAB's IBEW Local 3 workers.

Buy American Act Compliant:

This product is a COTS item manufactured in the United States, and is compliant with the Buy American Act.

Recovery Act (ARRA) Compliant:

This product complies with the 52.225-21 "Required Use of American Iron, Steel, and Manufactured Goods-- Buy American Act-- Construction Materials (October 2010).

Copyright © 2014 RAB Lighting Inc. All Rights Reserved Note: Specifications are subject to change at any time without notice

Technical Specifications (continued)

Other

Trade Agreements Act Compliant:

This product is a COTS item manufactured in the United States, and is compliant with the Trade Agreements Act.

GSA Schedule:

Suitable in accordance with FAR Subpart 25.4.

Sensor Specifications

Handheld Wireless Configuration Tool:

Adjust settings using handheld wireless configuration tool. Only available with 0-10V dimming driver options.

Dimensions

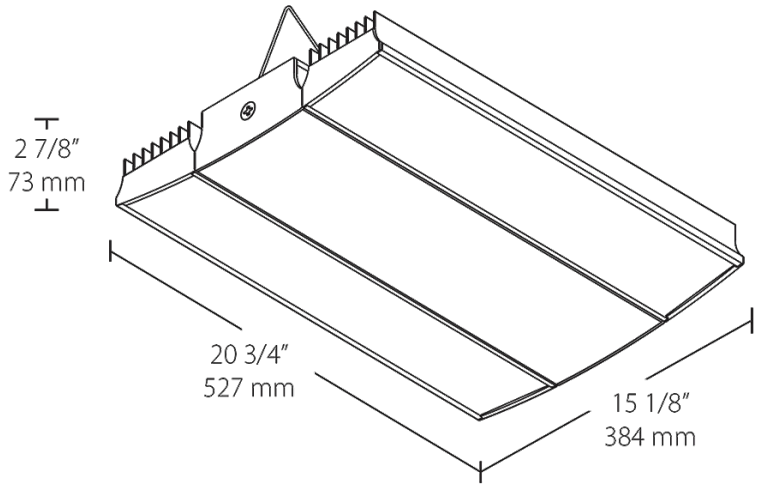

Features

- Ideal for large spaces
- Ultra-high efficacy
- Up to 60% less energy usage than equivalent metal halide fixtures
- 100,000 hour lifespan, virtually maintenance free operation
- Optional 0-10V driver for variable dimming down to 10%

Ordering Matrix

Family	Mount	Watts	Color Temp	Finish	Voltage	Dimming
RAIL						
	= V Hooks **P** = Pendant or Surface	**95** = 95W **150** = 150W **185** = 185W **225** = 225W	= 5000K (Cool) **YN** = 3500K (Warm Neutral) **N** = 4000K (Neutral)	**W** = White	= 120-277V **/480** = 480V	= No Dimming **/D10** = Dimmable

Copyright © 2014 RAB Lighting Inc. All Rights Reserved Note: Specifications are subject to change at any time without notice