HAYBAY100/D10/LOS/E2

Haybay's modular design creates a world of flexibility by keeping your base price low and letting you choose specific options like reflectors, motion sensors and emergency batteries separately.

Color: White

Weight: 25.1 lbs

Project:	Type:
Prepared By:	Date:

Driver Info		LED Info	
Type:	Constant Current	Watts:	100W
120V:	0.87A	Color Temp:	5000K
208V:	0.52A	Color Accuracy:	74 CRI
240V:	0.45A	L70 Lifespan:	100000
277V:	0.37A	Lumens:	10955
Input Watts:	103W	Efficacy:	107 LPW
Efficiency:	97%		

Technical Specifications

Listings

UL Listing:

Suitable for damp locations

IESNA LM-79 & LM-80 Testing:

RAB LED luminaires have been tested by an independent laboratory in accordance with IESNA LM-79 and LM-80, and have received the Department of Energy "Lighting Facts" label.

DLC Listed:

This product is on the Design Lights Consortium (DLC) Qualified Products List and is eligible for rebates from DLC Member Utilities.
DLC Product Code: P9MKVB9P

Construction

Vibration Rating:

Industry-leading 5G vibration rating per ANSI C136.31.

Cold Weather Starting:

Minimum starting temperature is -40° F (-40° C)

Ambient Temperature:

Suitable for use in 104° F (40° C) ambient temperatures.

Housing:

Precision die-cast aluminum with sheet metal driver bracket/mounting

Mounting:

Heavy-duty 3/4" NPS hook and 6 ft. cord; is also 3/4" pendant mount capable (pendant by others).

Finish:

Our environmentally friendly polyester powder coatings are formulated for high durability and long-lasting color, and contain no VOC or toxic heavy metals.

Green Technology:

Mercury and UV free. RoHS compliant components.

Electrical

Emergency Battery Backup:

Battery backup will operate the LED Lamp for 90 minutes if power fails. Wired for 120V-277V.

Drivers:

Class 2, constant current, 50/60 Hz., 120-277V, 120V: 0.87A, 208V: 0.52A, 240V: 0.45A, 277V: 0.37A

Dimming Driver:

Driver includes dimming control wiring for 0-10V dimming systems. Requires separate 0-10V DC dimming circuit. Dims as low as 10%.

THD:

2.7% at 120V, 6.5% at 277V

Power Factor:

99.9% at 120V, 99.8% at 277V

Surge Protection:

4kV

LED Characteristics

LEDs:

Long-life, high-efficiency, surface mount LEDs

Lifespan:

100,000-hour LED lifespan based on IES LM-80 results and TM-21 calculations.

Color Uniformity:

RAB's range of CCT (Correlated Color Temperature) follows the guidelines of the American National Standard for (SSL) Products, ANSI C78.377-2015.

Other

Reflector Options:

Clear prismatic acrylic reflectors available in 11" or 8.5" height; frosted prismatic acrylic reflectors available in 11" or 8.5" height; white aluminum reflector available in 5" height. Click to see all reflectors.

LOSBAY800 Sensor:

360° White Lens (Installed) - 60 ft. diameter when mounted at 40 ft., Aisle Black Lens (included as option) - 60 ft. x 20 ft. wide.

Warranty:

RAB warrants that our LED products will be free from defects in materials and workmanship for a period of five (5) years from the date of delivery to the end user, including coverage of light output, color stability, driver performance and fixture finish.

Buy American Act Compliant:

This product is a COTS item manufactured in the United States, and is compliant with the Buy American Act.

Recovery Act (ARRA) Compliant:

This product complies with the 52.225-21 "Required Use of American Iron, Steel, and Manufactured Goods-- Buy American Act-- Construction Materials (October 2010).

GSA Schedule:

Suitable in accordance with FAR Subpart 25.4.

Copyright © 2014 RAB Lighting Inc. All Rights Reserved Note: Specifications are subject to change at any time without notice

HAYBAY100/D10/LOS/E2

Dimensions

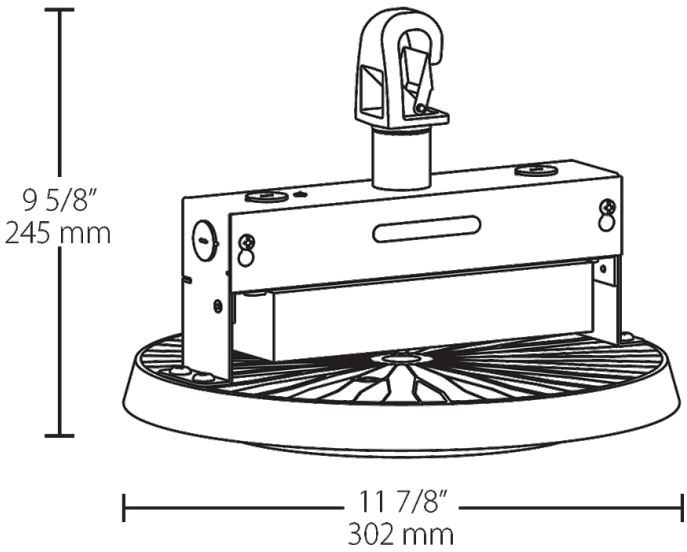

Features

Simple. Affordable, Modular design.

Open "airflow" design reduces operating temperatures and increases lifespan

Assortment of reflectors tailor the Haybay to specific applications

Available with a Lightcloud Controller, Lightcloud Sensor and other compatible RAB sensors

Ordering Matrix

Family	Wattage	Color Temp	Driver	Sensor Options	Options
HAYBAY	100		/D10	/LOS	/E2
	180 = 180W **150** = 150W **130** = 130W **100** = 100W	**Blank** = 5000K **N** = 4000K	**/D10** = 0-10V Dimming (standard)	**Blank** = No Sensor **/LOS** = LOSBAY 800 Sensor (base fixture only) **/LOSR** = LOSBAY 800 Sensor (requires reflector) **/LC** = Lightcloud™ Controller **/LCS** = Lightcloud™ Sensor (base fixture only) **/LCSR** = Lightcloud™ Sensor (requires reflector)	**Blank** = No Emergency Battery Backup **/E2** = Emergency Backup, 120-277V

Copyright © 2014 RAB Lighting Inc. All Rights Reserved Note: Specifications are subject to change at any time without notice