PIPXL100SFY/D10/LC

Industry-leading efficacy, incredible value. The low-cost floodlight family just upped its game. PIPXL™ - up to 16,600 lumens and 100W of affordable LED light.

Color: Bronze

Weight: 20.6 lbs

Project:	Type:
Prepared By:	Date:

Driver Info

Type:	Constant Current
120V:	0.93A
208V:	0.56A
240V:	0.49A
277V:	0.41A
Input Watts:	110W
Efficiency:	91%

LED Info

Watts:	100W
Color Temp:	3000K
Color Accuracy:	72 CRI
L70 Lifespan:	60000
Lumens:	15808
Efficacy:	143 LPW

Technical Specifications

Lightcloud

Lightcloud Installed:

Lightcloud is a commercial wireless lighting control system and service fully developed and supported by RAB. It's powerful and flexible, yet easy to use and install.

Listings

UL Listing:

Suitable for wet locations. Suitable for ground mounting.

IESNA LM-79 & LM-80 Testing:

RAB LED luminaires have been tested by an independent laboratory in accordance with IESNA LM-79 and LM-80, and have received the Department of Energy "Lighting Facts" label.

DLC Listed:

This product is listed by Design Lights Consortium (DLC) as an ultra-efficient premium product that qualifies for the highest tier of rebates from DLC Member Utilities.
DLC Product Code: PC618K83

Electrical

Dimming Driver:

Driver includes dimming control wiring for 0-10V dimming systems. Requires separate 0-10V DC dimming circuit. Dims as low as 10%.

Surge Protection:

4kV

Power Factor:

96.9% at 480V

LED Characteristics

LEDs:

Long-life, high-efficiency surface mounting LEDs

Lifespan:

60,000-hour LED lifespan based on IES LM-80 results and TM-21 calculations.

Color Uniformity:

RAB's range of CCT (Correlated Color Temperature) follows the guidelines of the American National Standard for Specifications for the Chromaticity of Solid State Lighting (SSL) Products, ANSI C78.377-2015.

Replacement:

Replaces up to 400W Metal Halide.

Optical

NEMA Type:

7H x 6V Beam Spread.

Construction

IP Rating:

Ingress Protection rating of IP66 for dust and water

Thermal Management:

Superior thermal management with external "Air-Flow" fins.

Maximum Ambient Temperature:

Suitable for use in 104° F (40°C) ambient temperatures

Cold Weather Starting:

The minimum starting temperature is -22° F (-30° C).

Housing:

Precision die-cast aluminum housing.

Lens:

Two (2) clear acrylic lens with integrated optics

Mounting:

Heavy-duty Slip Fitter for 2 3/8"OD pipe.

Effective Projected Area:

EPA = 1.4

Gaskets:

High temperature silicone gaskets.

Green Technology:

Mercury and UV free. RoHS compliant components. Polyester powder coat finish formulated without the use of VOC or toxic heavy metals.

Finish:

Formulated for high-durability and long lasting color.

Other

5 Yr Limited Warranty:

RAB warrantees fixture operation and paint finish for a period of 5 years.

Country of Origin:

Designed by RAB in New Jersey and assembled in the USA by RAB's IBEW Local 3 workers.

Buy American Act Compliant:

This product is a COTS item manufactured in the United States, and is compliant with the Buy American Act.

Copyright © 2014 RAB Lighting Inc. All Rights Reserved Note: Specifications are subject to change at any time without notice

Technical Specifications (continued)

Other

Recovery Act (ARRA) Compliant:

This product complies with the 52.225-21 "Required Use of American Iron, Steel, and Manufactured Goods-- Buy American Act-- Construction Materials (October 2010).

Trade Agreements Act Compliant:

This product is a COTS item manufactured in the United States, and is compliant with the Trade Agreements Act.

GSA Schedule:

Suitable in accordance with FAR Subpart 25.4.

Dimensions

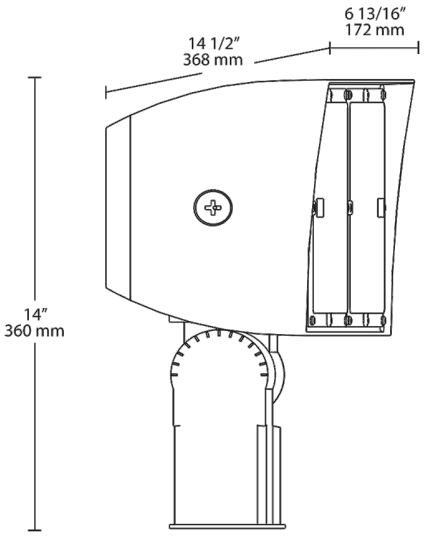

Features

- Ultra-high efficiency
- DLC Premium
- 0-10V Dimming, standard
- 60,000-Hour LED lifespan
- 5-Year limited warranty

Ordering Matrix

Family	Watts	Mount	Color Temp	Finish	Driver	Options
PIPXL	100	SF	Y		/D10	/LC
	100 = 100W **70** = 70W	**SF** = Slipfitter **T** = Trunnion	**Blank** = 5000K (Cool) **N** = 4000K (Neutral) **Y** = 3000K (Warm)	**Blank** = Bronze **W** = White	**/D10** = Dimmable 120-277V **/480/D10** = Dimmable 480V	**Blank** = No Options **/PCU** = 120-277V Button Photocell **/PCT** = 120-277V Twistlock photocell **/PCT4** = 480V Twistlock photocell **/7PR** = 7-Pin Receptacle **/BL** = Bi-Level **/LC** = Lightcloud

Copyright © 2014 RAB Lighting Inc. All Rights Reserved Note: Specifications are subject to change at any time without notice